TOWN OF LOS GATOS

RESIDENTIAL DECK/PORCH/STAIR/GUARDRAIL

SUBMITTAL REQUIREMENTS

In order to process and expedite your request for a building permit, **please submit the items listed below and include this Checklist in your submittal**. Incomplete submittals will not be accepted. **A plan check fee will be required at submittal.**

When do I need a Permit:

- Typically, decks less than 30" above grade accessory to a dwelling do not require a permit. They ARE, however, required to meet land use and zoning requirements.
- Building permits are required for all decks that are over 30" above grade at any point.
- Decks that are 6' or more above grade require engineering.
- All covered decks need a building permit.
- Check with the Planning Division to find your property's required setbacks. Setbacks from property lines vary depending on lot orientation to streets.

Required Plan Information:

Three (3) complete stapled (down the left side) sets of drawings 24"x36" minimum size - maximum size 30"x42" shall include:

1. General

- ☐ If you were required to go through the Planning process, **the Planning Department Conditions of Approval AND accompanying letter must be permanently affixed (i.e, copied) onto the first sheet**.
- ☐ **A Compliance Memorandum shall be prepared and submitted with the building permit application detailing how the Conditions of Approval will be addressed.**
- ☐ *Blueprint For A Clean Bay* sheet must be the second page (available at the Building Counter for a $3.00 fee, at San Jose Blue Print for a fee) or on our website (www.losgatosca.gov/building).
- ☐ Wet signature on all documents by design professional(s).
- ☐ Name, title, registration number, address, and telephone number of applicable design professional(s) on each sheet.
- ☐ Cover sheet information: Project address; Property Owner's Information; Design Professional's Information; List the 2016 California Building, Electrical, Mechanical, Plumbing, and Fire Codes; sheet index, scope of work, construction type, square footage of deck and/or porch, height of wall(s), lot size, average slope of lot, etc., legend for symbols, abbreviations, and notations used in the drawings.

(OVER)

Town of Los Gatos • Community Development • Building Division • 110 E. Main St., Los Gatos, CA 95031
408.354.6876 • www.losgatosca.gov • www.facebook.com/losgatosca

2. Construction Details (showing the following information):

- ☐ Plot/Site Plan. Location of existing and proposed deck(s)/stairs, and all other structures (i.e. house, detached garage, retaining walls) on the lot. The plot plan should show property line setbacks and North arrow.
- ☐ Site plan shall show all existing and proposed utilities (water service, sewage disposal system, gas, electric, telephone, cable, TV service lines and transformers).
- ☐ Site plan shall show existing trees, including diameter, location, species, existing grade at base and driplines.
- ☐ Provide a tree protection plan with the following tree protection notes: www.losgatosca.gov/documentcenter/view/15273
- ☐ Provide a construction management plan per www.losgatosca.gov/documentcenter/view/17600
- ☐ Deck Cross-sections that show all sides and include structural details
- ☐ Stair and railing details

3. Structural (if required)

- ☐ Foundation Plan
- ☐ Cross Sections
- ☐ Details and Notes

4. Documentation (if required)

- ☐ Structural calculations. Provide two (2) sets of wet signed and stamped calculations.

5. Other documentation that may be necessary, but not required for submittal

- ☐ Special Inspection form, available on our website (www.losgatosca.gov/building) or at the Building Service Counter. It must be ***completely filled out and signed by all required parties prior to permit issuance***. A separate form is required for each inspection if performed by separate inspectors.
- ☐ Santa Clara Valley Water District Permit. Required if you are doing construction within 50ft of a natural water course. Contact SCVWD at (408) 265-2600 x2253 for more information.

Notes:

- Permits can only be issued to a Property Owner (not a tenant) or a Licensed Contractor.
- No materials or containers (including debris boxes) are allowed to be stored in the public-right-of-way without first obtaining a permit to do so from the Engineering Division of the Public Works Department. Call (408) 399-5771 for requirements and fees.

I have read the above information and have submitted all the required information.

Signature: _____ **Date:** _____

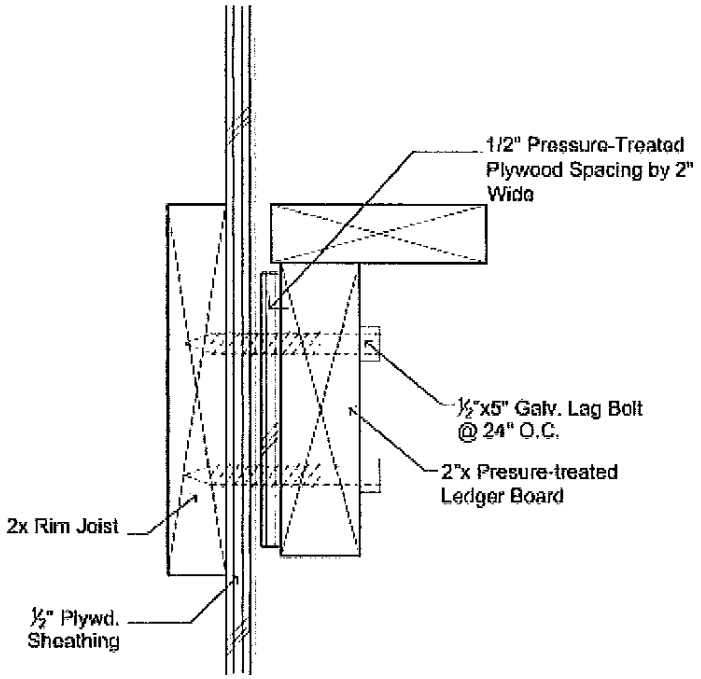

Figure 3: Alternate Connection Detail: ½" PT Plywood and ½" Drainage Spacers

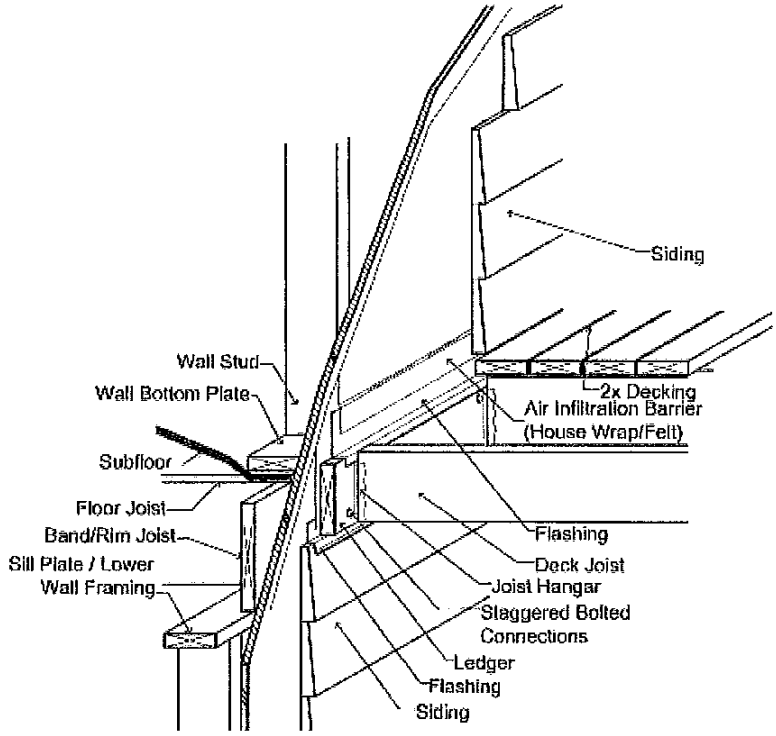

Figure 3: Deck Attachment Isometric

- Required **Elevations and Structural Details** (See Figure 3 for structural details and Figure 3.1 for Span Table/Footing Schedule):
  - Height of structure from grade;
  - Size and depth of footings;
  - Method of attachment to the existing structure; and
  - Flashing and connection details.

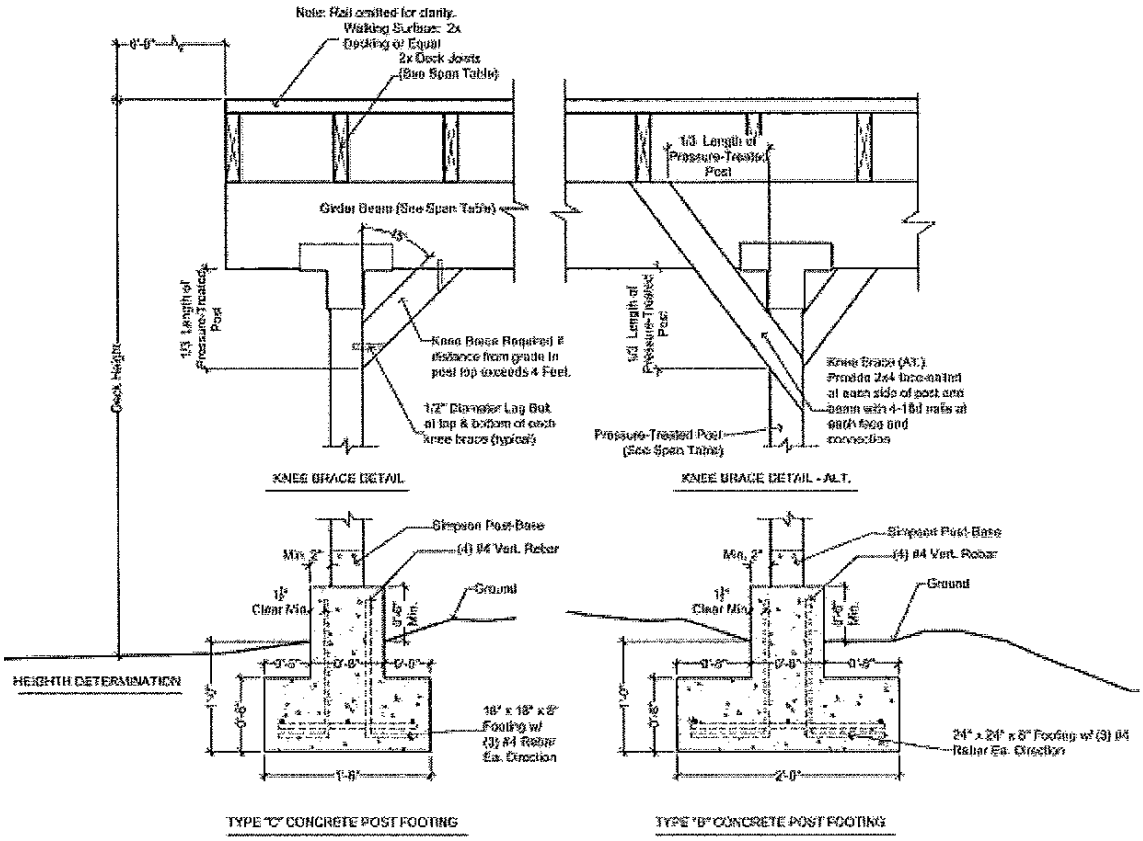

Figure 3: Footing and Knee Brace Details

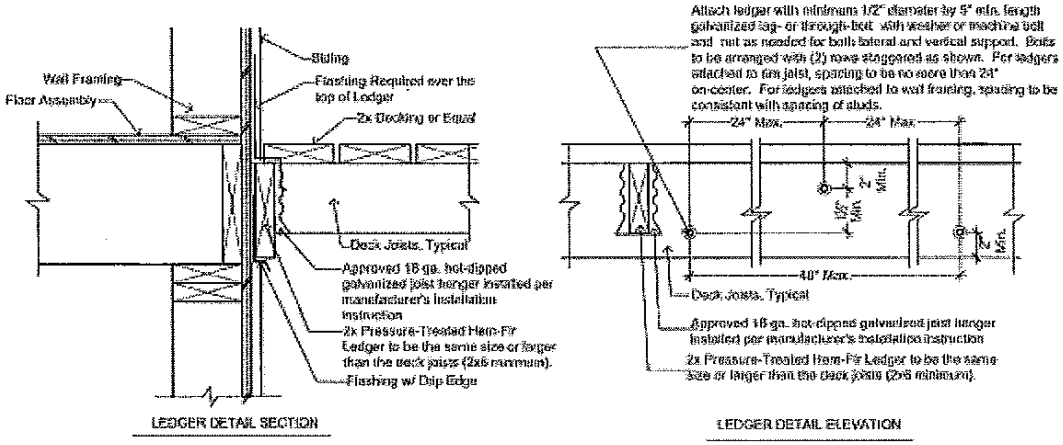

Figure 3: Connection Details

SPAN TABLE / FOOTING SCHEDULE FOR EXTERIOR RESIDENTIAL DECKS

(Figure 3.1)
Spans based on the use of Hem-Fir #2 or better lumber
Loading based on 10# dead load + 40# live load
Beam spans and footings assume a max. 24" overhang

Joist Size	Joist Spacing	Span ft-in.	Girder Beam Spans (maximums between posts and footings, Typ.)					
			4x6	Footing	4x8	Footing	4x10	Footing
2x6	12"	10'-0"	6'	A	8'	B	10'	C
	16"	9'-1"	6'	A	8'	B	10'	C
	24"	7'-11"	7'	A	9'	B	11'	C
2x8	12"	13'-2"	5'	B	6'	B	8'	C
	16"	12'-0"	5'	B	7'	B	9'	C
	24"	10'-2"	6'	B	8'	B	10'	C
2x10	12"	16'-10"	4'	B	5'	B	7'	C
	16"	15'-2"	5'	B	6'	B	8'	C
	24"	12'-5"	5'	B	7'	B	9'	C

FOOTING TYPES

Note: All footings shall be a minimum of 12" below grade

Type	Size	Reinforcement	Note
A	12"x12"x18"	None	Pier blocks with positive connections and located 12" below grade may be substituted for type A footings. Not to be used on footings 48" above grade.
B	18"x18"'x8"	(3) - #4 Ea. Way	
C	24"x24"x8"	(3) – #4 Ea. Way	