Town of Los Gatos
Parks and Public Works Department

PAGEANT WAY PARKING LOT RECONSTRUCTION

Project No. 16-817-0707

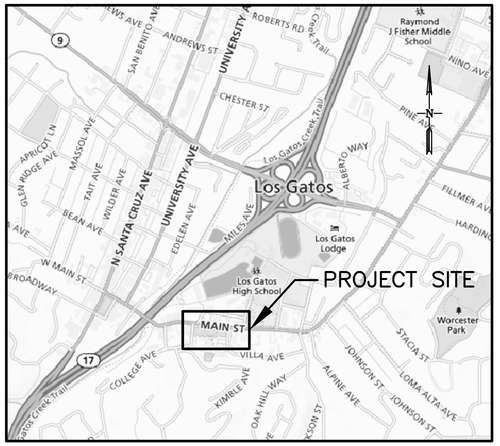

VICINITY MAP

NO SCALE

INDEX TO DRAWINGS

SHT. NO.	DWG. NO.	SHEET TITLE
1	T-1	TITLE, MAPS, INDEX OF DRAWINGS AND SIGNATURES
2	C-1	TOPOGRAPHY AND DEMOLITION PLAN
3	C-2	LAYOUT, PAVING AND STRIPING PLAN
4	C-3	GRADING AND DRAINAGE PLAN
5	C-4	CIVIL DETAILS
6	C-5	MISCELLANEOUS CIVIL DETAILS
7	C-6	MISCELLANEOUS CIVIL DETAILS
8	C-7	MISCELLANEOUS CIVIL DETAILS

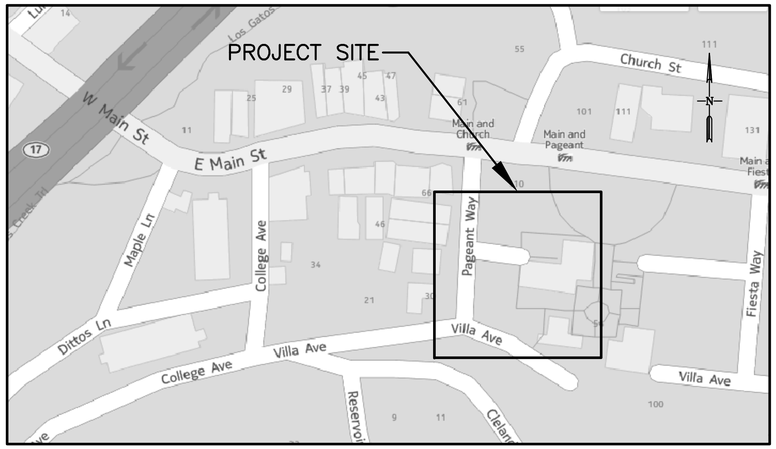

KEY MAP

NO SCALE

ABBREVIATIONS

AB	AGGREGATE BASE	FG	FINISHED GRADE	PCC	PORTLAND CEMENT CONCRETE
AC	ASPHALT CONCRETE	FH	FIRE HYDRANT	PIV	POST INDICATOR VALVE
ADA	AMERICANS WITH DISABILITIES ACT	FL	FLOW LINE	PVCP	POLYVINYL CHLORIDE PIPE
APPROX	APPROXIMATE	FM	FORCE MAIN	RCP	REINFORCED CONCRETE PIPE
ASB	AGGREGATE SUBBASE	FOC	FACE OF CURB	RDWD	REDWOOD
BLDG	BUILDING	G	GAS	RSR	RISER
BM	BENCH MARK	GFL	GUTTER FLOWLINE	S	SLOPE
CB	CATCH BASIN	GLD	GRATED LINE DRAIN	S	SOUTH
C.B.C.	CALIFORNIA BUILDING CODE	GPS	GLOBAL POSITIONING SYSTEM	SBD	SUBDRAIN
C.F.R.	CODE OF FEDERAL REGULATION	GR	GRATE	SD	STORM DRAIN
CJ	CONSTRUCTION JOINT	H	HORIZONTAL	SDMH	STORM DRAIN MANHOLE
℄	CENTERLINE	HDPE	HIGH DENSITY POLYETHYLENE	SDR	STANDARD DIMENSION RATIO
C.L.	CHAIN LINK	HMA	HOT MIX ASPHALT	SF	SQUARE FEET
CLR	CLEAR	HP	HIGH POINT	SIM	SIMILAR
CMP	CORRUGATED METAL PIPE	INT	INTERIOR	SS	SANITARY SEWER
CO	CLEANOUT	INV	INVERT	SSMH	SANITARY SEWER MANHOLE
CONC	CONCRETE	IRR	IRRIGATION	STA	STATION
DET	DETAIL	JPCP	JOINTED PLAIN CONCRETE PAVEMENT	STD	STANDARD
DI	DROP INLET	JTS	JOINTS	STN	STATION
DI	DUCTILE IRON	LAT	LATERAL	TBM	TEMPORARY BENCH MARK
DIA	DIAMETER	LF	LONGITUDINAL FEET	TC	TOP OF CURB
DIMS	DIMENSIONS	LGS	LOS GATOS-SARATOGA	THRU	THROUGH
DIP	DUCTILE IRON PIPE	MAX	MAXIMUM	TYP	TYPICAL
DP	DEEP	MBGR	METAL BEAM GUARD RAIL	UG	UNDERGROUND
DS	DOWNSPOUT	MCC	MOTOR CONTROL CENTER	UTIL	UTILITY
DWG	DRAWING	MH	MANHOLE	V	VERTICAL
E	EAST	MIN	MINIMUM	VIF	VERIFY IN FIELD
EA	EACH	MIN	MINUTE	W	WATER
EL	ELEVATION	MISC	MISCELLANEOUS	W	WEST
ELEC	ELECTRICAL	MULTI	MULTIPLE	W	WIDTH
EP	EDGE OF PAVEMENT	N	NORTH	WM	WATER METER
EV	ELECTRIC VEHICLE	NGVD	NATIONAL GEODETIC VERTICAL DATUM	WV	WATER VALVE
EW	EACH WAY	No.	NUMBER	W/	WITH
EWEF	EACH WAY EACH FACE	NTS	NOT TO SCALE		
EX	EXISTING	O.C.	ON CENTER		
EXIST	EXISTING	OG	ORIGINAL GROUND		

Rev.	Date	Description	By

TITLE, MAPS, INDEX OF DRAWINGS AND SIGNATURES

ANWEST INC.
Civil + Structural Consulting Engineers
3095 Richmond Parkway, Suite 212
Richmond, CA 94806

9/23/16

REGISTERED PROFESSIONAL ENGINEER ANDRE G. JADKOWSKI No. C-42314 CIVIL STATE OF CALIFORNIA

Designed By: AGJ	Scale: AS SHOWN
Drawn By: AJV	Project No: 5942-01
Checked By: AGJ	Date: 09/23/2016

Town of Los Gatos
Parks and Public Works Department
PAGEANT WAY PARKING LOT RECONSTRUCTION
Project No. 16-817-0707

Dwg No: T-1

ANW24x36-LosGatos

MODIFIED: 9/21/16 9:25

FILENAME: 5942-01\Drafting\Projdwgs\5942011T01.dwg

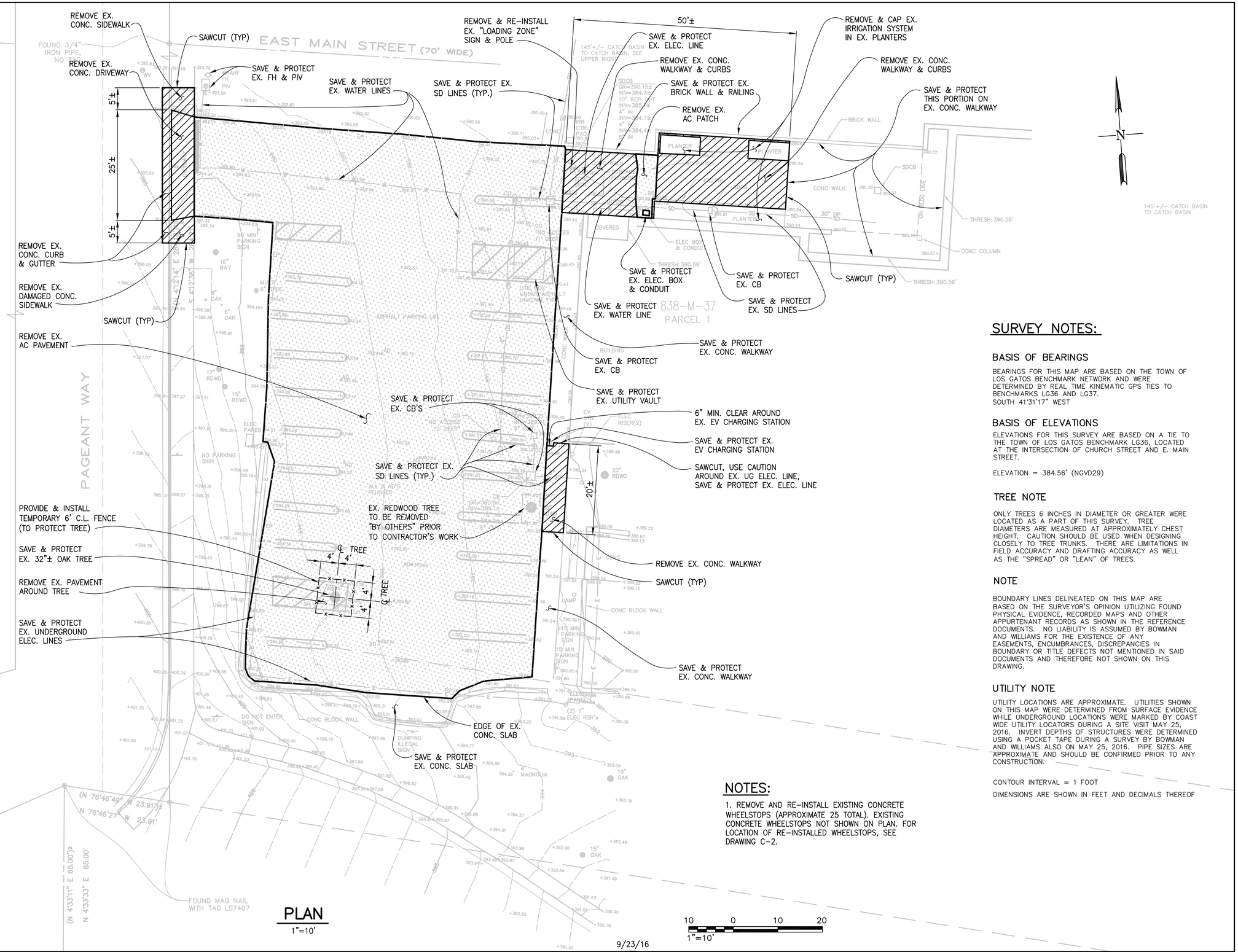

SURVEY ABBREVIATIONS & LEGEND:

ABBREVIATIONS

AC	ASPHALT CONCRETE
AD	AREA DRAIN
BLDG	BUILDING
CB	CATCH BASIN
CO	CLEANOUT
CONC	CONCRETE
CTRL	CONTROL
DP	DEEP
ELEC	ELECTRIC
EP	EDGE PAVEMENT
EV	ELECTRIC VEHICLE
FH	FIRE HYDRANT
FL	FLOWLINE
GR	GRATE
INV	INVERT
IRR	IRRIGATION
±	PLUS OR MINUS
MIN	MINUTE
MULTI	MULTIPLE
PIV	POST INDICATOR VALVE
RCP	REINFORCED CONCRETE PIPE
RDWD	REDWOOD
RSR	RISER
SD	STORM DRAIN
STN	STATION
UTL	UTILITY
WM	WATER METER
WV	WATER VALVE

LEGEND

	CONTOUR (MAJOR)
	CONTOUR (MINOR)
	PROPERTY LINE
	FLOWLINE
	FOUND MONUMENT AS NOTED
	FIRE HYDRANT
	POST INDICATOR VALVE
E	ELECTRICAL LINE
	SIGN
+46.21	SPOT ELEVATION
SD	STORM DRAIN LINE
	TREE AS NOTED
	VALVE AS NOTED
W	WATER LINE

DEMOLITION LEGEND:

	REMOVE EX. AC PAVEMENT
	REMOVE EX. CONC.
—x—x—x—	TEMPORARY C.L. FENCE

SURVEY NOTES:

BASIS OF BEARINGS

BEARINGS FOR THIS MAP ARE BASED ON THE TOWN OF LOS GATOS BENCHMARK NETWORK AND WERE DETERMINED BY REAL TIME KINEMATIC GPS TIES TO BENCHMARKS LG36 AND LG37.
SOUTH 41°31'17" WEST

BASIS OF ELEVATIONS

ELEVATIONS FOR THIS SURVEY ARE BASED ON A TIE TO THE TOWN OF LOS GATOS BENCHMARK LG36, LOCATED AT THE INTERSECTION OF CHURCH STREET AND E. MAIN STREET.

ELEVATION = 384.56' (NGVD29)

TREE NOTE

ONLY TREES 6 INCHES IN DIAMETER OR GREATER WERE LOCATED AS A PART OF THIS SURVEY. TREE DIAMETERS ARE MEASURED AT APPROXIMATELY CHEST HEIGHT. CAUTION SHOULD BE USED WHEN DESIGNING CLOSELY TO TREE TRUNKS. THERE ARE LIMITATIONS IN FIELD ACCURACY AND DRAFTING ACCURACY AS WELL AS THE "SPREAD" OR "LEAN" OF TREES.

NOTE

BOUNDARY LINES DELINEATED ON THIS MAP ARE BASED ON THE SURVEYOR'S OPINION UTILIZING FOUND PHYSICAL EVIDENCE, RECORDED MAPS AND OTHER APPURTENANT RECORDS AS SHOWN IN THE REFERENCE DOCUMENTS. NO LIABILITY IS ASSUMED BY BOWMAN AND WILLIAMS FOR THE EXISTENCE OF ANY EASEMENTS, ENCUMBRANCES, DISCREPANCIES IN BOUNDARY OR TITLE DEFECTS NOT MENTIONED IN SAID DOCUMENTS AND THEREFORE NOT SHOWN ON THIS DRAWING.

UTILITY NOTE

UTILITY LOCATIONS ARE APPROXIMATE. UTILITIES SHOWN ON THIS MAP WERE DETERMINED FROM SURFACE EVIDENCE WHILE UNDERGROUND LOCATIONS WERE MARKED BY COAST WIDE UTILITY LOCATORS DURING A SITE VISIT MAY 25, 2016. INVERT DEPTHS OF STRUCTURES WERE DETERMINED USING A POCKET TAPE DURING A SURVEY BY BOWMAN AND WILLIAMS ALSO ON MAY 25, 2016. PIPE SIZES ARE APPROXIMATE AND SHOULD BE CONFIRMED PRIOR TO ANY CONSTRUCTION:

CONTOUR INTERVAL = 1 FOOT

DIMENSIONS ARE SHOWN IN FEET AND DECIMALS THEREOF

NOTES:

1. REMOVE AND RE-INSTALL EXISTING CONCRETE WHEELSTOPS (APPROXIMATE 25 TOTAL). EXISTING CONCRETE WHEELSTOPS NOT SHOWN ON PLAN. FOR LOCATION OF RE-INSTALLED WHEELSTOPS, SEE DRAWING C-2.

PLAN

1"=10'

10 0 10 20
1"=10'

Rev.	Date	Description	By

TOPOGRAPHY AND DEMOLITION PLAN

ANWEST INC.
Civil + Structural Consulting Engineers
3095 Richmond Parkway, Suite 212
Richmond, CA 94806

REGISTERED PROFESSIONAL ENGINEER ANDRE G. JADKOWSKI No. C-42314 CIVIL STATE OF CALIFORNIA
9/23/16

Designed By: AGJ	Scale: 1"=10'
Drawn By: AJV	Project No: 5942-01
Checked By: AGJ	Date: 09/23/2016

Town of Los Gatos
Parks and Public Works Department
PAGEANT WAY PARKING LOT RECONSTRUCTION
Project No. 16-817-0707

Dwg No: C-1

ANW24x36-LosGatos
MODIFIED: 9/21/16 9:25
FILENAME: 5942-01/Drafting/Projdwgs/5942001C01.dwg

GENERAL NOTES:

GENERAL

1. ALL WORK SHALL BE IN ACCORDANCE WITH THE SPECIAL PROVISION SPECIFICATIONS AND THESE PLANS.

2. NORMAL WORKING HOURS FOR TOWN PARKS AND PUBLIC WORKS CONSTRUCTION INSPECTORS ARE 8:00 A.M. TO 5:00 P.M., MONDAY THROUGH FRIDAY. UNLESS OTHERWISE NOTED, THE COST OF OVERTIME FOR CITY INSPECTION WILL BE CHARGED TO THE CONTRACTOR IF THE CONTRACTOR WORKS BEFORE 8:00 A.M., AFTER 5:00 P.M., OR ON SATURDAY, SUNDAY OR HOLIDAYS.

3. USE TRAFFIC CONTROL DEVICES WHEN WORKING WITHIN TRAFFICKED AREAS.

4. CONSTRUCTION EQUIPMENT IS TO YIELD TO PUBLIC TRAFFIC WHEN ENTERING OR LEAVING ROADWAYS.

5. MAINTAIN PEDESTRIAN ACCESS ALONG ADJACENT STREETS AND PUBLIC PATHS AND WALKWAYS. MAINTAIN PEDESTRIAN AND DRIVEWAY ACCESS TO ADJACENT RESIDENCES, BUSINESSES, AND PUBLIC BUILDINGS.

6. PROTECT EXISTING FACILITIES FROM DAMAGE. ANY DAMAGED FACILITIES ARE TO BE REPLACED AT NO ADDITIONAL COST TO THE TOWN OF LOS GATOS.

7. ALL CURBS, GUTTER, SIDEWALK AND DRIVEWAYS THAT ARE DAMAGED OR ARE TO BE REMOVED AND REPLACED DURING CONSTRUCTION SHALL BE REPLACED WITHIN ONE WEEK AFTER ITS REMOVAL.

8. PRIOR TO THE DEMOLITION OF ANY EXISTING FACILITIES WHICH ARE TO BE RESTORED, CONTRACTOR SHALL SURVEY AND RECORD EXISTING SURFACE FEATURES AND CONDITIONS AND ESTABLISH SUFFICIENT HORIZONTAL AND VERTICAL CONTROL SUCH THAT THE CONTRACTOR SHALL BE ABLE TO RESTORE THESE FACILITIES TO THEIR PRE-DEMOLITION LOCATION, ELEVATION AND LIMITS. SUCH FACILITIES SHALL INCLUDE, BUT NOT BE LIMITED TO, CURB AND GUTTER, SIDEWALK, DRIVEWAY, LANDSCAPING, ETC. CONTRACTOR SHALL SUBMIT THE SURVEY OF THE EXISTING FEATURES AND CONDITIONS FOR REVIEW AND APPROVAL BY THE ENGINEER.

NOTIFICATION

9. CONTRACTOR SHALL NOTIFY THE TOWN ENGINEER AT LEAST TWO (2) WORKING DAYS PRIOR TO COMMENCING WORK OR IF WORK HAS BEEN SUSPENDED FOR A PERIOD OF MORE THAN TWENTY-FOUR (24) HOURS.

10. CONTRACTOR SHALL CONTACT USA (UNDERGROUND SERVICE ALERT) AT PHONE NUMBER 811 FORTY-EIGHT (48) HOURS PRIOR TO BEGINNING WORK TO VERIFY EXISTING UNDERGROUND UTILITIES.

11. CONTRACTOR SHALL NOTIFY ALL PUBLIC OR PRIVATE UTILITY OWNERS FORTY-EIGHT (48) HOURS PRIOR TO COMMENCEMENT OF WORK ADJACENT TO THE UTILITY UNLESS EXCAVATION PERMIT SPECIFIES OTHERWISE.

12. CONTRACTOR IS REQUIRED TO CALL FOR INSPECTIONS A MINIMUM OF TWO (2) WORKING DAYS IN ADVANCE OF THE REQUIRED INSPECTION TIME.

UTILITIES

13. ALL UTILITIES (IF SHOWN) INCLUDING, BUT NOT LIMITED TO SANITARY SEWER, STORM WATER, WATER, GAS, CABLE AND TELEPHONE LINE LOCATIONS ARE APPROXIMATE AND ARE BASED ON RECORD DATA. THE EXACT LOCATIONS ARE TO BE DETERMINED BY THE CONTRACTOR IN ADVANCE OF CONSTRUCTION. CONTRACTOR SHALL SUPPORT STREET LIGHTS, TELEPHONE POLES AND ANY OTHER UTILITIES DURING CONSTRUCTION IN THE VICINITY OF THOSE UTILITIES. CONTRACTOR SHALL BE RESPONSIBLE FOR THE REPAIR OF ANY DAMAGE.

14. CONTRACTOR SHALL COORDINATE WORK TO AVOID CONFLICT WITH EXISTING FACILITIES.

15. CONTRACTOR SHALL MAINTAIN EXCAVATIONS FREE OF WATER. PROVIDE, OPERATE, AND MAINTAIN DEWATERING PUMPING EQUIPMENT.

HEALTH AND SAFETY

16. CONTRACTOR SHALL CONFORM TO THE RULES AND REGULATIONS OF THE STATE CONSTRUCTION SAFETY ORDERS PERTAINING TO EXCAVATION AND TRENCHES. A COPY OF THE CONSTRUCTION SAFETY ORDERS IS AVAILABLE AT THE TOWN.

17. CONTRACTOR SHALL CLEAN UP ALL DIRT AND DEBRIS FROM CITY STREETS THAT ARE ATTRIBUTABLE TO CONSTRUCTION ACTIVITIES. THE STREET CLEANING SHALL INCLUDE WASHING THE STREET FROM A TANKER TRUCK WITH A HIGH-PRESSURE NOZZLE AND/OR SWEEPING THE STREETS WITH BOTH A BROOM-TYPE SWEEPER AND A REGENERATIVE AIR VACUUM SWEEPER AS DIRECTED BY THE ENGINEER.

18. CONTRACTOR SHALL DEVELOP AND COMPLY WITH A HEALTH AND SAFETY PLAN. CONSTRUCTION PERSONNEL SHALL BE TRAINED FOR THE WORK TO BE DONE, IN COMPLIANCE WITH ALL APPLICABLE HEALTH AND SAFETY CODES INCLUDING, BUT NOT NECESSARILY LIMITED TO, 40 CFR 1910.120.

19. CONTRACTOR IS RESPONSIBLE FOR COMPLIANCE WITH ALL CURRENTLY APPLICABLE SAFETY LAW OF ANY JURISDICTIONAL BODY.

20. CONTRACTOR SHALL PROVIDE ADEQUATE DUST CONTROL AT ALL TIMES AS REQUIRED BY THE ENGINEER.

MISCELLANEOUS

21. STATE AND FEDERAL REGULATIONS REQUIRE THAT NO POLLUTANTS BE ALLOWED TO ENTER STORM DRAINS. THEREFORE, ALL WASTE MATERIAL, INCLUDING SAWCUT SLURRY MUST BE VACUUMED OR CONTAINED BY USING CHECK DAMS IN THE GUTTERLINE. WHEN DRY, REMOVE THE SLURRY FROM THE AREA. CLEAN CATCH-BASINS IF WASTE MATERIAL ENTERS THE STORM DRAIN.

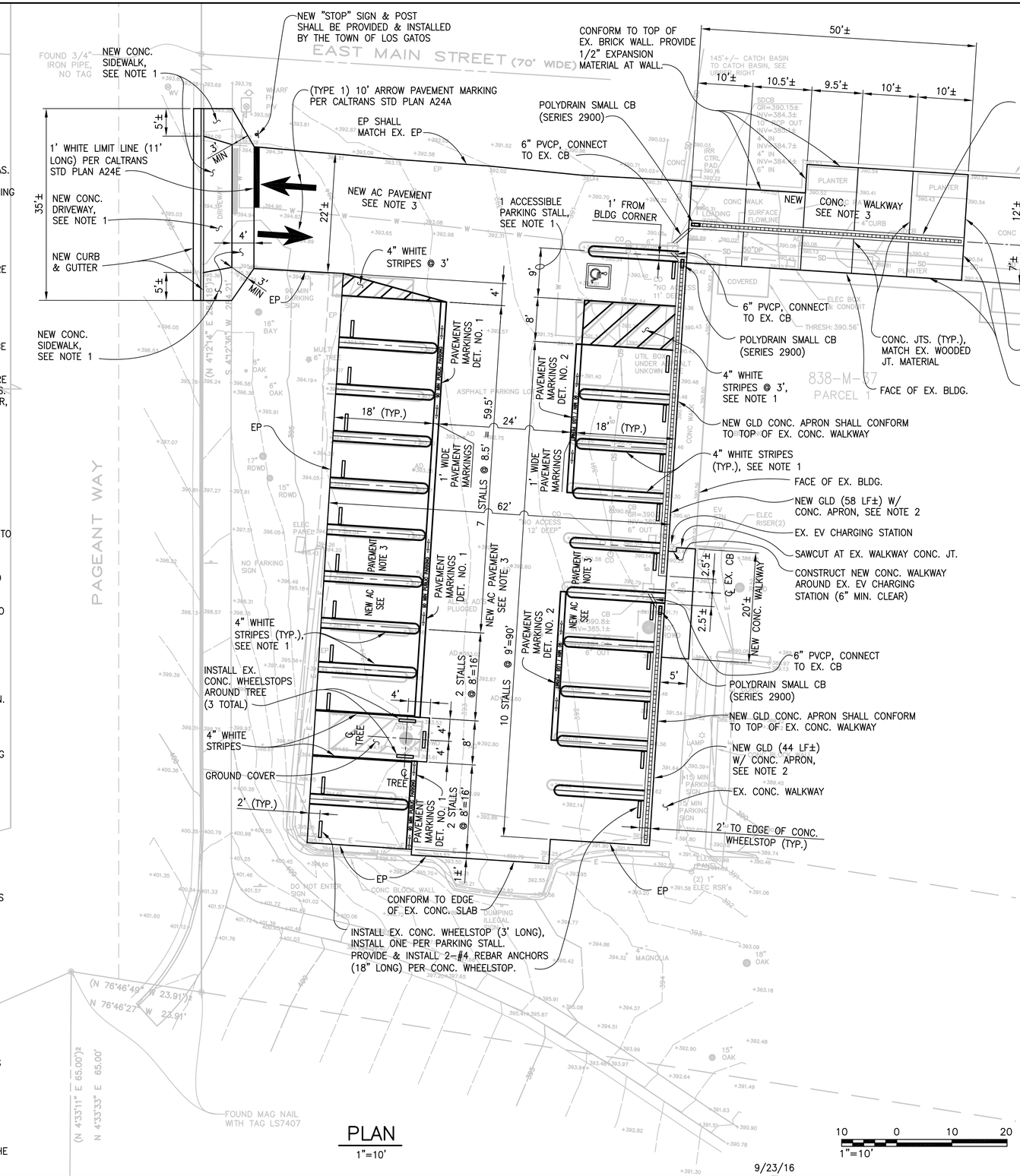

PLAN
1"=10'

NOTES:

1. CONTRACTOR SHALL CONFORM TO TOWN OF LOS GATOS STANDARD PLANS, SEE DRAWINGS C-5, C-6 AND C-7.

2. FOR GRATED LINE DRAIN (GLD) WITH CONCRETE APRON, SEE DRAWING C-4.

3. FOR NEW AC PAVEMENT SECTION AND NEW CONCRETE WALKWAY SECTION, SEE DRAWING C-4.

PAVEMENT MARKINGS DETAIL NO. 1
NTS

PAVEMENT MARKINGS DETAIL NO. 2
NTS

NOTE:

CONTRACTOR SHALL MATCH EXISTING PAVEMENT MARKINGS.

Rev.	Date	Description	By

LAYOUT, PAVING AND STRIPING PLAN

ANWEST INC.
Civil + Structural Consulting Engineers
3095 Richmond Parkway, Suite 212
Richmond, CA 94806

REGISTERED PROFESSIONAL ENGINEER ANDRE G. JADKOWSKI No. C-42314 CIVIL STATE OF CALIFORNIA
9/23/16

Designed By: AGJ	Scale: 1"=10'
Drawn By: AJV	Project No: 5942-01
Checked By: AGJ	Date: 09/23/2016

Town of Los Gatos
Parks and Public Works Department
PAGEANT WAY PARKING LOT RECONSTRUCTION
Project No. 16-817-0707

Dwg No: C-2

ANW24x36-LosGatos
MODIFIED: 9/21/16 9:25
FILENAME: 5942-01/Drafting/Projdwgs/594201C02.dwg

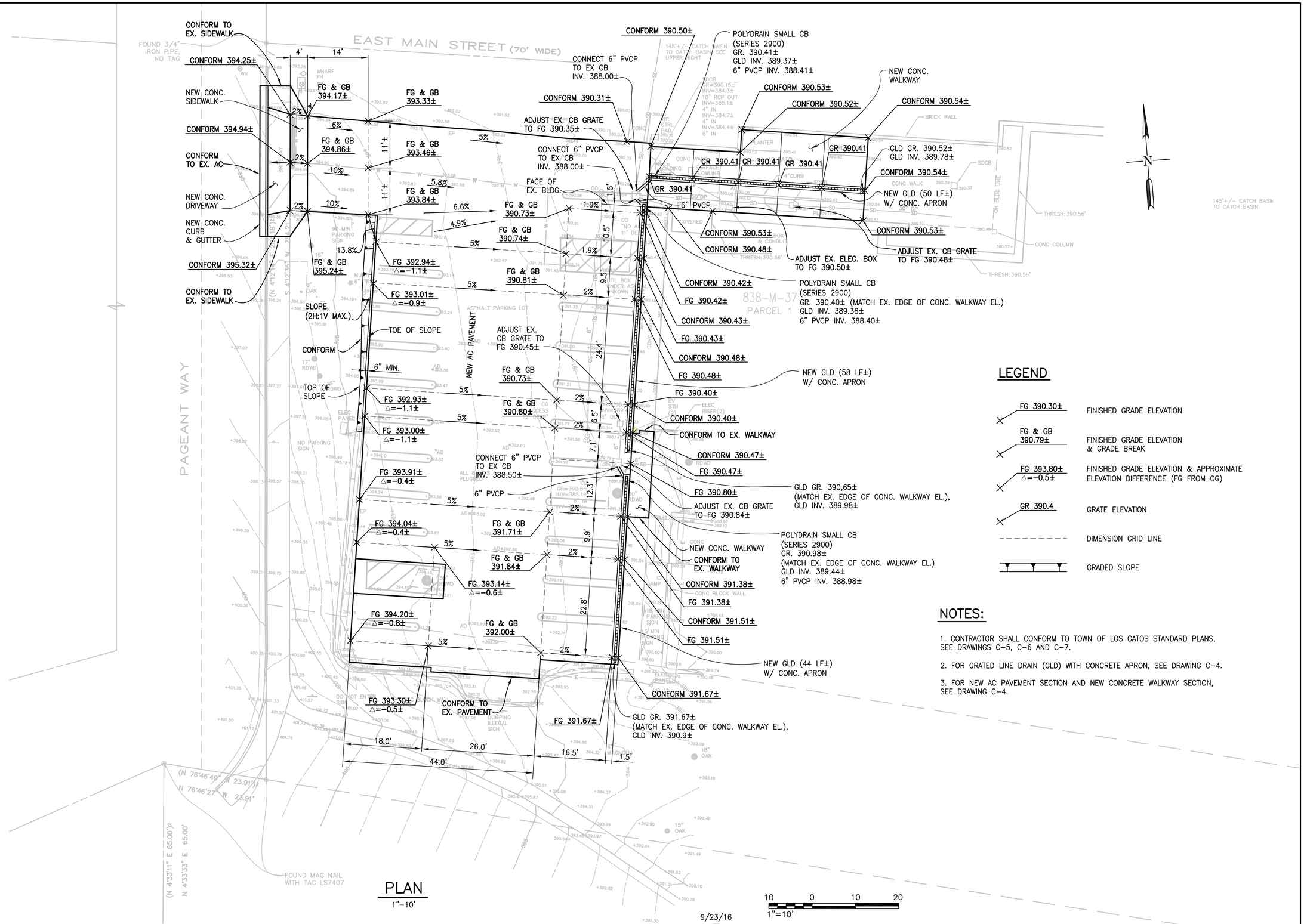

LEGEND

FG 390.30±	FINISHED GRADE ELEVATION
FG & GB 390.79±	FINISHED GRADE ELEVATION & GRADE BREAK
FG 393.80± △=-0.5±	FINISHED GRADE ELEVATION & APPROXIMATE ELEVATION DIFFERENCE (FG FROM OG)
GR 390.4	GRATE ELEVATION
- - - - - - - -	DIMENSION GRID LINE
	GRADED SLOPE

NOTES:

1. CONTRACTOR SHALL CONFORM TO TOWN OF LOS GATOS STANDARD PLANS, SEE DRAWINGS C-5, C-6 AND C-7.
2. FOR GRATED LINE DRAIN (GLD) WITH CONCRETE APRON, SEE DRAWING C-4.
3. FOR NEW AC PAVEMENT SECTION AND NEW CONCRETE WALKWAY SECTION, SEE DRAWING C-4.

PLAN

1"=10'

10 0 10 20
1"=10'

Rev.	Date	Description	By

GRADING AND DRAINAGE PLAN

ANWEST INC.
Civil + Structural Consulting Engineers
3095 Richmond Parkway, Suite 212
Richmond, CA 94806

REGISTERED PROFESSIONAL ENGINEER ANDRE G. JADKOWSKI No. C-42314 CIVIL STATE OF CALIFORNIA
9/23/16

Designed By: AGJ	Scale: 1"=10'
Drawn By: AJV	Project No: 5942-01
Checked By: AGJ	Date: 09/23/2016

TOWN OF LOS GATOS

Town of Los Gatos
Parks and Public Works Department
PAGEANT WAY PARKING LOT RECONSTRUCTION
Project No. 16-817-0707

Dwg No: C-3

ANW24x36-LosGatos
MODIFIED: 9/21/16 2:35
FILENAME: 5942-01/Drafting/Projdwgs/5942-01C03.dwg

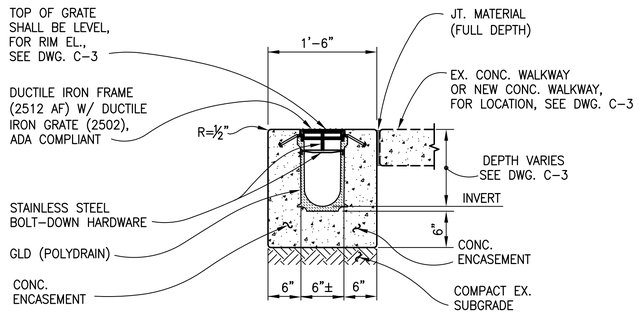

GRATED LINE DRAIN (GLD) AND CONCRETE APRON DETAIL (ADA COMPLIANT)

1"=1'-0"

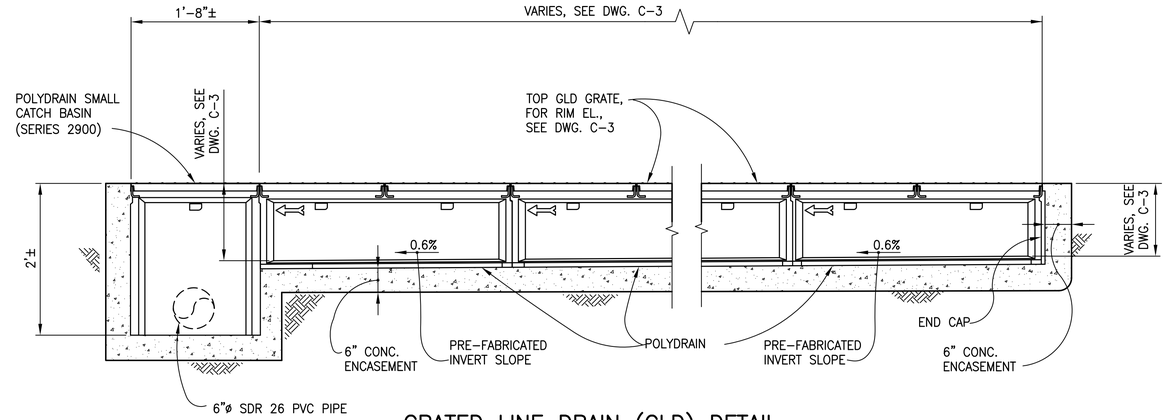

GRATED LINE DRAIN (GLD) DETAIL (SECTION)

NTS

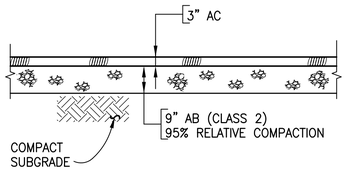

NEW AC PAVEMENT SECTION

NTS

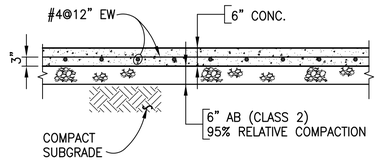

NEW CONCRETE WALKWAY SECTION

NTS

1 0 1 2
1"=1'-0"

9/23/16

Rev.	Date	Description	By

CIVIL DETAILS

ANWEST INC.
Civil + Structural Consulting Engineers
3095 Richmond Parkway, Suite 212
Richmond, CA 94806

REGISTERED PROFESSIONAL ENGINEER ANDRE G. JADKOWSKI No. C-42314 CIVIL STATE OF CALIFORNIA

Designed By:	Scale:
AGJ	AS SHOWN
Drawn By: AJV	Project No: 5942-01
Checked By: AGJ	Date: 09/23/2016

Town of Los Gatos
Parks and Public Works Department
PAGEANT WAY PARKING LOT RECONSTRUCTION
Project No. 16-817-0707

Dwg No: C-4

ANW24x36-LosGatos
MODIFIED: 9/21/16 9:50
FILENAME: 5942-01\Drafting\Projdwgs\594201C04.dwg

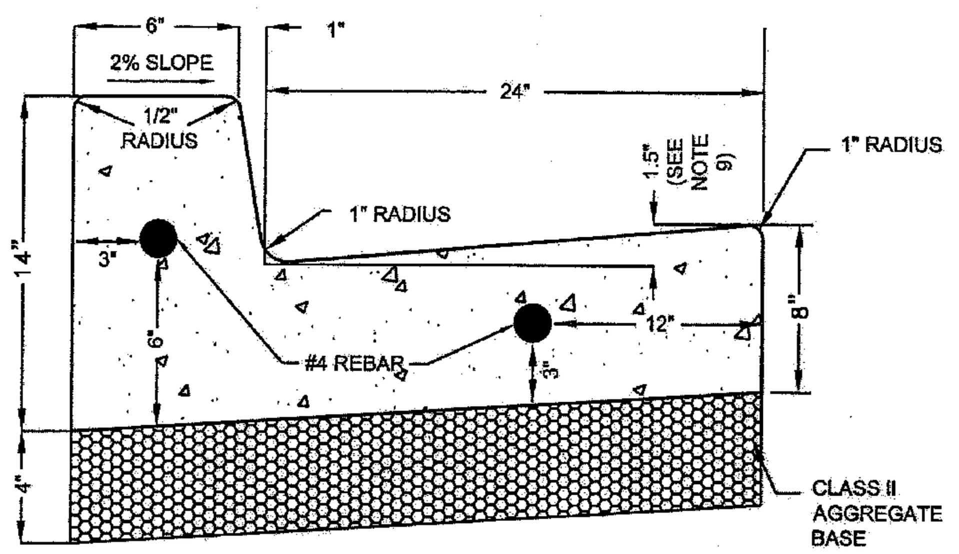

NOTES:

1. ALL RADII LESS THAN 100' SHALL USE FLEXIBLE WOOD OR METAL FORMS TO ELIMINATE ANGULAR POINTS AT 10' SECTION POINTS.
2. SAWCUT AND REMOVE 20 IN. (MIN.) STREET SECTION FOR CURB AND GUTTER INSTALLATION ON EXISTING STREETS.
3. 3/4" EXPANSION JOINTS TO BE PLACED AT DRIVEWAY SECTIONS, CURB RETURNS, CURB RAMPS & COLD JOINTS OR A MAX. OF 30' C/C. EXPANSION JOINTS SHALL PROTRUDE 1" BELOW THE BOTTOM OF GUTTER
4. THRU JOINTS SHALL BE PLACED ADJACENT TO CATCH BASINS, INLETS AT POINTS OF TANGENCY ON STREETS, AND AT ALLEY AND DRIVEWAY RETURNS. MAXIMUM SPACING SHALL BE 30' PRE-MOLDED JOINT FILLER, SHALL BE 1/2" WIDE AND CONFORM TO AASHTO DESIGN M213. DUMMY JOINTS SHALL BE PLACED EVERY 10'.
5. FINISHED WORK SHALL NOT VARY MORE THAN 1/8" IN GRADE AND 1/4" IN ALIGNMENT.
6. THE FINISHED CURB SHALL IMMEDIATELY BE SPRAYED WITH A TRANSPARENT CURING COMPOUND. CURB SHALL BE COVERED BY WATERPROOF PAPER OR PLASTIC MEMBRANE IN THE EVENT OF RAIN OR OTHER UNSUITABLE WEATHER. CURING TIME SHALL BE A MINIMUM OF 72 HOURS.
7. ALL CURB AND GUTTER SHALL BE PLACED ON A MIN. OF 4" AGGREGATE BASE CLASS II 95% MAX. COMPACTION ASTM D1557
8. #4 REBAR SHALL BE EXTENDED ALONG LENGTH OF THE CURB AND GUTTER
9. GUTTER PAN SLOPE SHALL NOT EXCEED 5% SLOPE AT PEDESTRIAN CURB RAMP ENTRY LOCATIONS. CONTRACTOR SHALL USE 1.2" (MAX) BETWEEN LIP OF GUTTER AND FLOWLINE AT THESE LOCATIONS.
10. ALL CONCRETE SHALL INCLUDE ONE (1) POUND OF LAMP BLACK PER CUBIC YARD OF CONCRETE.
11. ALL CURB AND GUTTER SHALL HAVE 2 #4 REBARS THE ENTIRE LENGTH AND EMBEDDED ON BOTH ENDS USING DOWELS (ONE DOWEL IN THE CENTER OF THE GUTTER, ONE DOWEL IN THE CENTER OF THE CURB.)

NOT TO SCALE

APPROVED BY	DATE		STD. PLAN NO.
	NOVEMBER 2010	CONCRETE CURB AND GUTTER MODIFIED	ST-210
TOWN ENGINEER			

T:\GIS\PPW\TLG GENERAL\Standard Details\ST-210.dwg

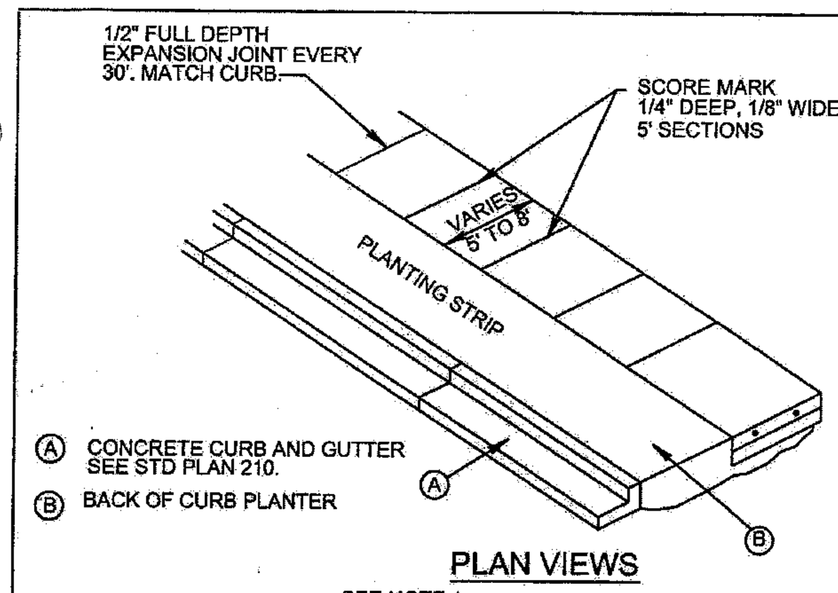

(A) CONCRETE CURB AND GUTTER SEE STD PLAN 210.

(B) BACK OF CURB PLANTER

PLAN VIEWS

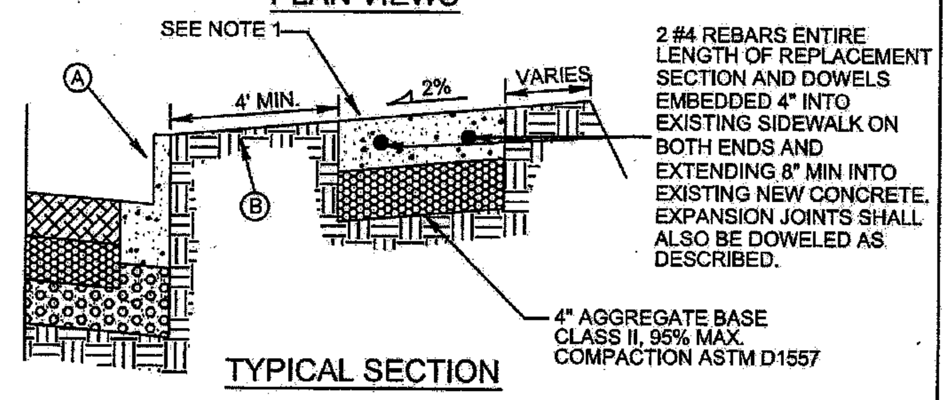

TYPICAL SECTION

NOTES:

1. SIDEWALKS SHALL BE A MINIMUM OF 8" THICK, AND SHALL BE CLASS A PORTLAND CEMENT CONCRETE.
2. FULL EXPANSION JOINTS SHALL BE PLACED TO MATCH THOSE PLACED IN ADJACENT CURB & GUTTER, WITH MAXIMUM SPACING OF 30 FEET.
3. SUBGRADE SHALL HAVE 95% MAXIMUM COMPACTION ASTM D1557
4. SIDEWALK SHALL BE
   8" THICK BEHIND COMMERCIAL DRIVEWAYS.
5. THE FINISHED SIDEWALK SHALL BE SPRAYED WITH A TRANSPARENT CURING COMPOUND COVERED BY WATERPROOF PAPER OR PLASTIC SHEETING IN THE EVENT OF RAIN OR OTHER INCLEMENT WEATHER. CURING TIME SHALL BE FOR A MINIMUM OF 72 HOURS.
6. ALL JOINTS SHALL BE CLEANED AND EDGED WITH AN EDGER HAVING A 1/4" RADIUS.
7. SIDEWALK AND PLANTER STRIP WIDTHS SHALL CONFORM TO DIMENSIONS SHOWN IN APPROPRIATE STREET CROSS SECTION DETAIL.
8. THE WIDTH OF SIDEWALKS DIRECTLY BEHIND CURB WITHOUT PLANTER SHALL BE A MIN. OF 5' FROM BACK OF CURB.
9. CONCRETE SHALL INCLUDE ONE (1) POUND OF LAMP BLACK PER CUBIC YARD OF CONCRETE.
10. EXPOSED SURFACES SHALL BE A LIGHT BROOM FINISH.

NOT TO SCALE

APPROVED BY	DATE		STD. PLAN NO.
	NOVEMBER 2010	CONCRETE SIDEWALK MODIFIED	ST-216
TOWN ENGINEER			

T:\GIS\PPW\TLG GENERAL\Standard Details\ST-216.dwg

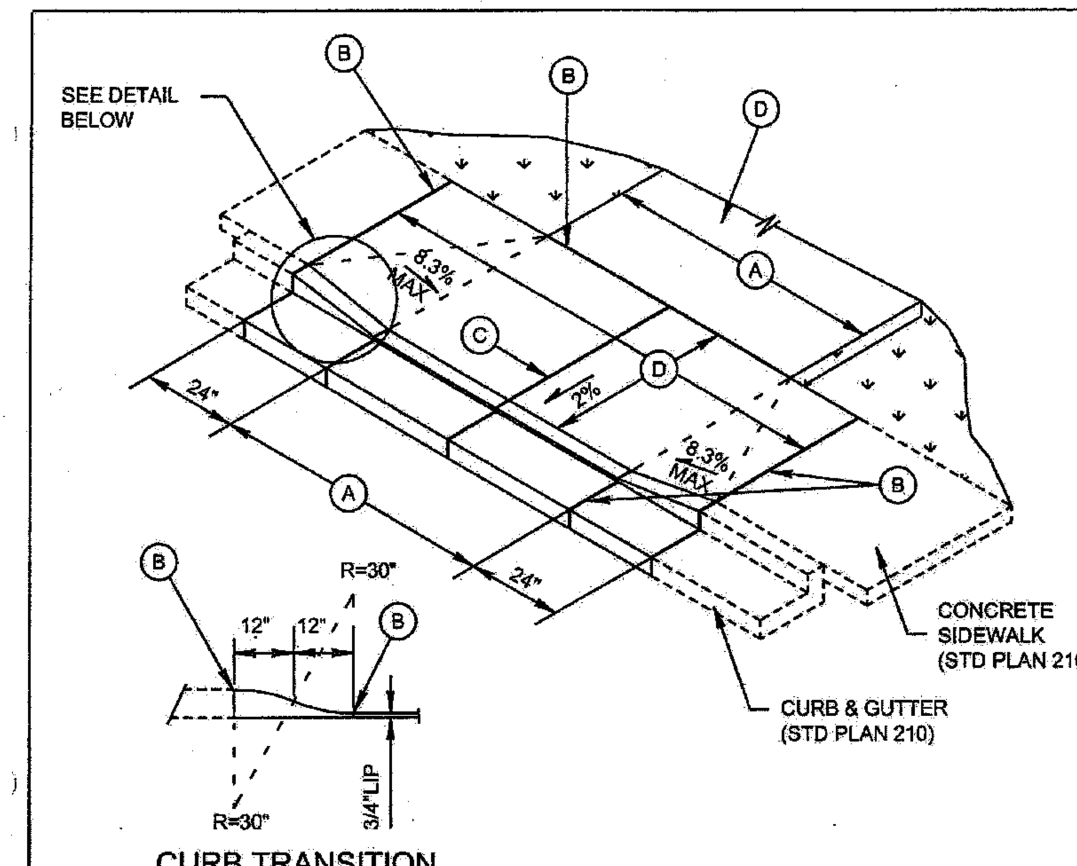

CURB TRANSITION DETAIL

(A) EQUALS WIDTH OF DRIVEWAY AT PROPERTY LINE. MINIMUM WIDTH = 14'.

(B) 1/2" WIDE FULL DEPTH EXPANSION JOINT.

(C) FULL DEPTH EXPANSION JOINT IF (A) IS 15' OR GREATER.

(D) DRIVEWAY TO BE SURFACED WITH ASPHALT OR CONCRETE.

(E) DRIVEWAY CONCRETE SHALL BE A MIN. OF 8" THICK FOR COMMERCIAL AND IS TO BE PLACED ON A MINIMUM OF 6" CLASS II AGGREGATE BASE 95% MAXIMUM COMPACTION ASTM D1557, OVER COMPACTED SUBGRADE.

(F) ALL CONCRETE SHALL BE CLASS A, PER CALTRANS SPECS, WITH 1 LB. (MIN.) LAMP BLACK PER CUBIC YARD.

(G) ALL WORK SHALL COMFORM TO CURRENT ADA REQUIREMENTS.

MODIFIED — NOT TO SCALE

APPROVED BY	DATE		STD. PLAN NO.
	NOVEMBER 2010	CONCRETE DRIVEWAY WITHOUT PLANTER	ST-219
TOWN ENGINEER			

T:\GIS\PPW\TLG GENERAL\Standard Details\ST-219.dwg

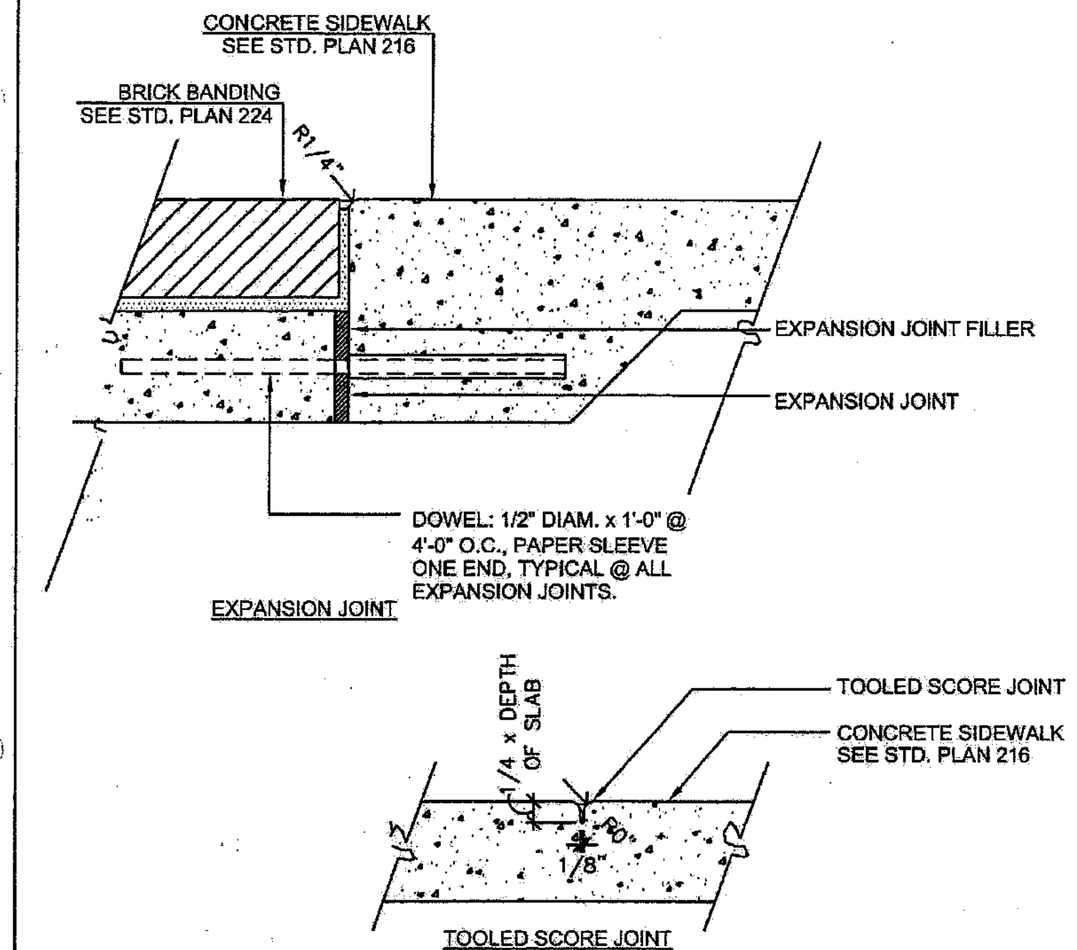

NOTES:

1. BRICKS FOR VILLA HERMOSA PATTERN CONCRETE SIDEWALK SHALL BE MCNEAR WIRE-CUT RED SOLID JUMBO BRICK (3 1/2" x 3 1/2" x 11 1/2") OR AS APPROVED BY THE ENGINEER. BULLNOSE BRICKS FOR PLANTERS SHALL BE MCNEAR WIRE-CUT RED CORED BULLNOSE JUMBO BRICK (2 7/16" x 3 7/8" x 11 1/2").
2. MORTAR SHALL CONFORM TO ASTM C270, TYPE "M" PROPERTY SPECIFICATION, WITH 2500 PSI MIN. AT 28 DAYS. OMIT LIME PUTTY IF PLASTIC TYPE CEMENT IS USED. COLOR OF MORTAR SHALL BE MEDIUM BROWN #641, TRUE TONE CEMENT COLORS BY DAVIS COLORS, (800) 356-4848. MORTAR AGGREGATE SHALL CONFORM TO ASTM C144. GROUT AGGREGATE SHALL CONFORM TO ASTM C404. HYDRATED LIME SHALL CONFORM TO ASTM C207.
3. CONTRACTOR SHALL SUBMIT BRICK, BULLNOSE BRICK, AND GROUT SAMPLES TO ENGINEER FOR APPROVAL.

NOT TO SCALE

APPROVED BY	DATE		STD. PLAN NO.
	NOVEMBER 2010	CONCRETE JOINTS	ST-226
TOWN ENGINEER			

T:\GIS\PPW\TLG GENERAL\Standard Details\ST-226.dwg

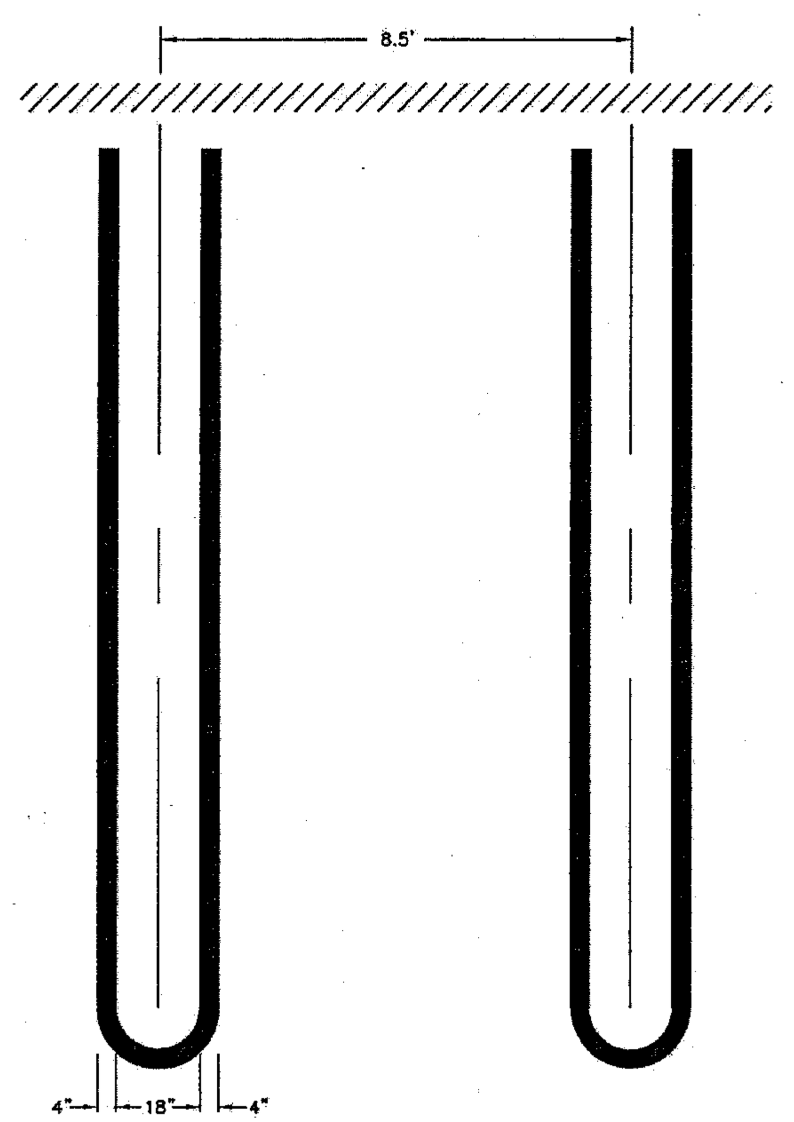

NOTES:

1. ALL OFF-STREET PARKING SHALL COMPLY WITH SECTION 29.10.155 OF THE LOS GATOS TOWN CODE.

NOT TO SCALE

APPROVED BY	DATE		STD. PLAN NO.
	NOVEMBER 2010	OFF-STREET PARKING DOUBLE STRIPE	ST-264
TOWN ENGINEER			

T:\GIS\PPW\TLG GENERAL\Standard Details\ST-264.dwg

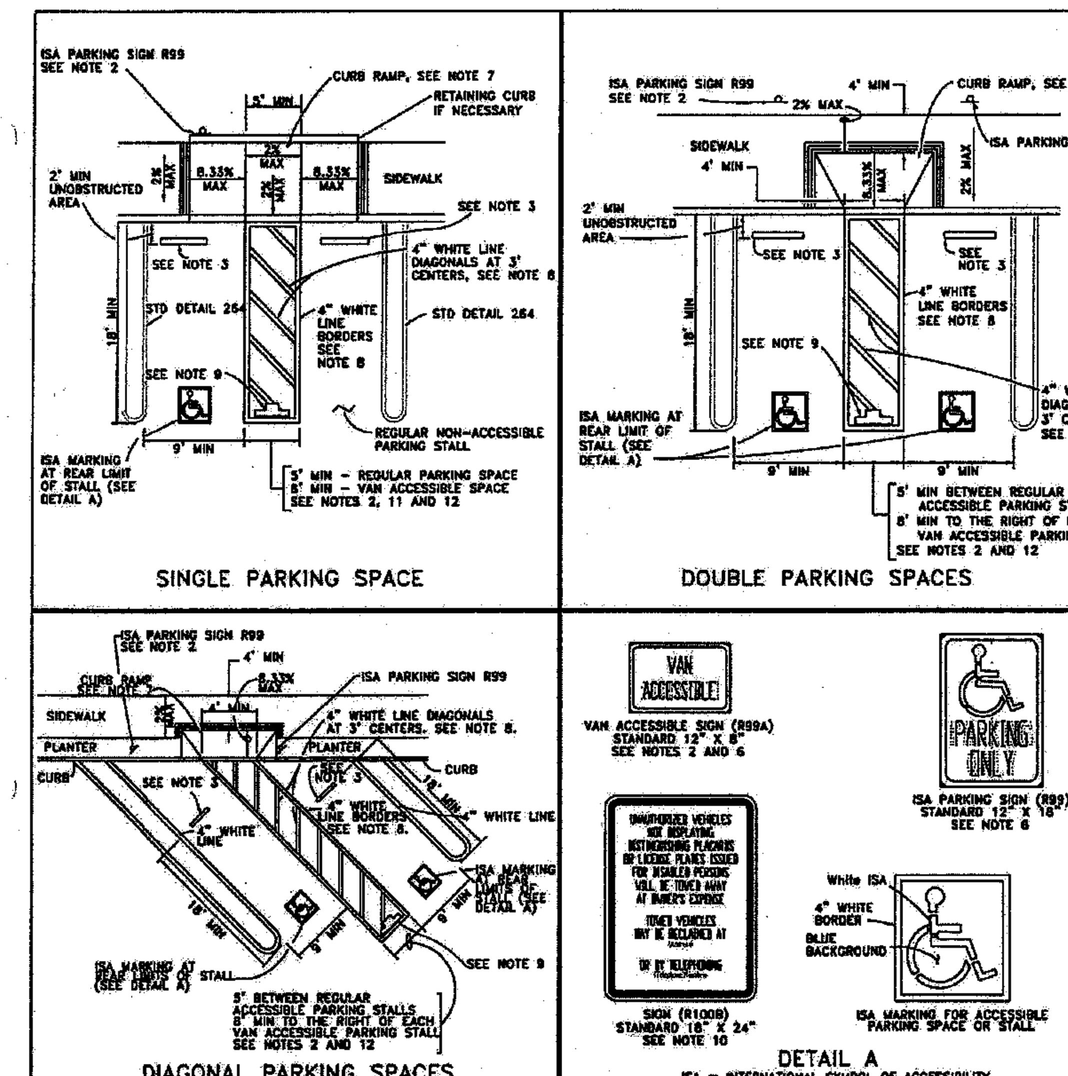

Number of Accessible Parking:

TOTAL NUMBER OF PARKING SPACES OR STALLS	MINIMUM NUMBER OF DISABLED ACCESSIBLE PARKING SPACES OR STALLS
1–25	1
26–50	2
51–75	3
76–100	4
101–150	5
151–200	6
201–300	7
301–400	8
401–500	9
501–1000	2% OF TOTAL
>1000	20 + 1 FOR EACH 100 OR FRACTION THEREOF OVER 1001

TABLE A

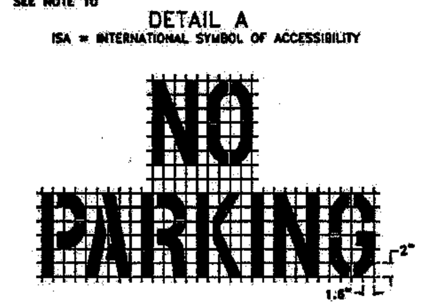

PAVEMENT MARKING DETAIL
SEE NOTE 7

APPROVED BY	DATE		STD. PLAN NO.
	NOVEMBER 2010	ACCESSIBLE PARKING (CBC Section 1129B) PLEASE REFER TO NOTES ON ST-266	ST-265
TOWN ENGINEER			

T:\GIS\PPW\TLG GENERAL\Standard Details\ST-265.dwg

NOTES:

1. ACCESSIBLE PARKING SPACES SERVING A PARTICULAR BUILDING SHALL BE LOCATED ON THE SHORTEST ACCESSIBLE ROUTE OF TRAVEL FROM ADJACENT PARKING TO AN ACCESSIBLE ENTRANCE. IN PARKING FACILITIES THAT DO NOT SERVE A PARTICULAR BUILDING, ACCESSIBLE PARKING SHALL BE LOCATED ON THE SHORTEST ACCESSIBLE ROUTE OF TRAVEL TO AN ACCESSIBLE PEDESTRIAN ENTRANCE OF THE PARKING FACILITY.
2. ONE IN EVERY EIGHT ACCESSIBLE OFF-STREET PARKING STALLS, BUT NOT LESS THAN ONE, SHALL BE SERVED BY AN ACCESSIBLE AISLE OF 8' MIN WIDTH AND SHALL BE SIGNED VAN ACCESSIBLE. THE R99A "VAN ACCESSIBLE" SIGN SHALL BE MOUNTED BELOW THE R99 "ISA PARKING" SIGN.
3. IN EACH PARKING STALL, A CURB OR BUMPER SHALL BE PROVIDED AND LOCATED TO PREVENT ENCROACHMENT OF VEHICLES OVE RTHE REQUIRED WIDTH OF WALKWAYS. PARKING STALLS SHALL BE SO LOCATED THAT PERSONS WITH DISABILITIES ARE NOT COMPELLED TO WHEEL OR WALK BEHIND PARKED VEHICLES OTHER THAN THEIR OWN.
4. SURFACE SLOPES OF ACCESSIBLE OFF-STREET PARKING STALLS SHALL BE THE MINIMUM POSSIBLE AND SHALL NOT EXCEED 2% IN ANY DIRECTION.
5. TABLE A SHALL BE USED TO DETERMINE THE REQUIRED NUMBER OF ACCESSIBLE PARKING STALLS IN ANY PARKING LOT OR GARAGE.
6. WHERE R99 "ISA PARKING" OR R99A "VAN ACCESSIBLE" SIGNS ARE INSTALLED ON SIDEWALKS OR OTHER PATHS OF TRAVEL, THE BOTTOM OF THE SIGN PANEL SHALL BE A MINIMUM OF 6'8" ABOVE THE SURFACE OF THE SIDEWALK OR PATH.
7. CURB RAMPS SHALL CONFORM TO THE STANDARD DETAIL 220-222.
8. BUILDING PERMIT(S) REQUIRED OFR NEW AND RESTRIPING OF EXISTING PARKING LOTS.
9. THE WORDS "NO PARKING" SHALL BE PAINTED IN WHITE LETTERS NO LESS THAN 12" HIGH AND LOCATED SO THAT IT IS VISIBLE TO TRAFFIC ENFORCEMENT OFFICIALS.
10. A R100B SIGN SHALL BE POSTED IN A CONSPICUOUS PLACE AT EACH ENTRANCE TO OFF-STREET PARKING FACILITIES OR IMMEDIATELY ADJACENT TO AND VISIBLE FROM EACH STALL. THE SIGN SHALL INCLUDE THE ADDRESS WHERE THE TOWED VEHICLE MAY BE RECLAIMED AND THE TELEPHONE NUMBER OF THE LOCAL TRAFFIC LAW ENFORCEMENT AGENCY.
11. WHERE A SINGEL (NON-VAN) ACCESSIBLE PARKING SPACE IS PROVIDED, THE LOADING AND UNLOADING ACCESS AISLE SHALL BE ON THE PASSENGER SIDE OF THE VEHICLE AS THE VEHICLE IS GOING FORWARD INTO THE PARKING SPACE.
12. WHERE A VAN ACCESSIBLE PARKING SPACE IS PROVIDED, THE LOADING AND UNLOADING ACCESS AISLE SHALL BE 8' WIDE MINIMUM, AND SHALL ONLY BE ON THE PASSENGER SIDE OF THE VEHICLE AS THE VEHICLE IS GOING FORWARD INTO THE PARKING SPACE.

APPROVED BY	DATE		STD. PLAN NO.
	NOVEMBER 2010	ACCESSIBLE PARKING NOTES (CBC Section 1129B)	ST-266
TOWN ENGINEER			

T:\GIS\PPW\TLG GENERAL\Standard Details\ST-266.dwg

NOTES:

1. THE FOLLOWING STANDARD PLANS ARE MODIFIED FOR THIS PROJECT: ST-210, ST-216 AND ST-219.

Rev.	Date	Description	By

MISCELLANEOUS CIVIL DETAILS

ANWEST INC.
Civil + Structural Consulting Engineers
3095 Richmond Parkway, Suite 212
Richmond, CA 94806

Designed By:	Scale:
___	AS SHOWN
Drawn By:	Project No:
AJV	5942-01
Checked By:	Date:
___	09/23/2016

Town of Los Gatos
Parks and Public Works Department
PAGEANT WAY PARKING LOT RECONSTRUCTION
Project No. 16-817-0707

Dwg No: C-5

ANW24x36-LosGatos
MODIFIED: 9/21/16 9:55
FILENAME: 5942-01\Drafting\Projdwgs\594201C05.dwg

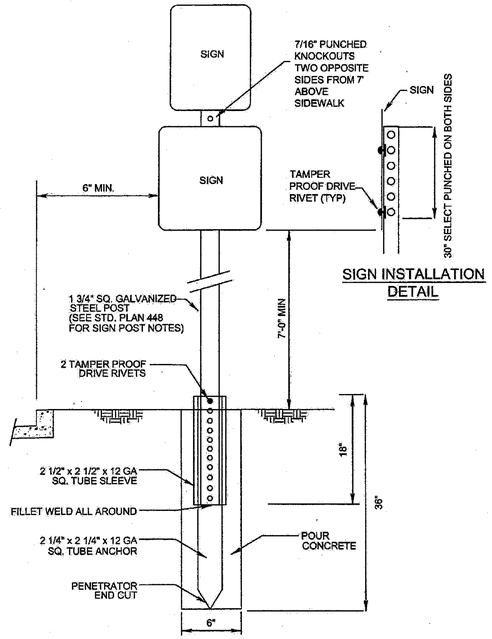

SIGN INSTALLATION DETAIL

APPROVED BY	DATE		SIGN MOUNTING DETAIL	STD. PLAN NO.
	NOVEMBER 2010			ST-239
TOWN ENGINEER			PLEASE SEE ST-240 FOR SIGN NOTES	

T:\GIS\PPW\TLG GENERAL\Standard Details\ST-239.dwg

NOTES:

1 SIDEWALKS AND PAVED AREAS SHALL BE CORE DRILLED BEFORE ATTEMPTING SIGN INSTALLATION.

2 SIGNS SHALL HAVE A MIN. HEIGHT OF 7' FROM THE NEAR EDGE OF SIGN TO THE SIDEWALK GRADE, OR TOP OF CURB, AND A 2' LATERAL CLEARANCE FROM THE FACE OF CURB TO THE NEAR EDGE OF SIGN. SIGN LOCATION SHALL BE AS SHOWN ON THE PLANS AND PER M.U.T.C.D.

3 REFLECTIVE SHEETING SHALL BE MANUFACTURED BY 3M TRAFFIC CONTROL MATERIALS DIVISION.

a. REGULATORY AND WARNING SIGNS SHEETING SHALL BE 3M DIAMOND GRADE VIP TYPE MATERIAL OR EQUIVALENT. SIZE OF SIGNS SHALL BE NO LESS THAN 30x30 UNLESS SPECIFIED BY THE TOWN ENGINEER.

SIGN POST NOTES:

4 ALL TUBING MATERIAL SHALL BE "ULTI-MATE" SELECT PUNCH TYPE GALVANIZED STEEL (ASTM A70 GRADE 33) OR APPROVED EQUIVALENT. POST SHALL BE POWDER-COATED BLACK.

5 TUBING SHALL BE ROLL FORMED FROM STEEL CONFORMING TO STANDARD SPECIFICATIONS FOR STEEL SHEET, A.S.T.M. DESIGNATION A653-94, STRUCTURAL QUALITY, GRADE 50 MODIFIED TO GRADE 55.

6 MATERIAL SHALL BE HOT-DIP GALVANIZED (ZINC COATED), COATING DESIGNATION G-90, WITH ADDED CHEMICAL TREATMENT FOR ENHANCED CORROSION PROTECTION.

7 THE CROSS SECTION OF THE POST SHALL BE SQUARE TUBING, CAREFULLY FORMED FROM 14 GA. STEEL SHEET AND WELDED SO AS THE WELD FLASH DOES NOT INTERFERE WITH THE TELESCOPING PROPERTIES. SIZE OF POST SHALL BE 1.75" x 1.75".

8 HOLE DIAMETER SHALL BE 7/16" (PLUS OR MINUS 1/64") ON 1" CENTERS ON TWO OPPOSITE SIDES. HOLES SHALL BE ON CENTERLINE OF EACH SIDE IN TRUE ALIGNMENT AND OPPOSITE TO EACH OTHER. TOLERANCE ON THE HOLE SPACING IS PLUS OR MINUS 1/8" IN 20'. FIRST SET OF HOLES SHALL BE 1/2" FROM THE TOP OF THE ANCHOR. ANCHOR SHALL HAVE EITHER 6 OR 12 SETS OF HOLES. THE BOTTOM OF THE ANCHOR SHALL HAVE A PENETRATOR POINT.

9 CONCRETE SHALL BE POURED AROUND POST.

APPROVED BY	DATE		SIGN NOTES	STD. PLAN NO.
	NOVEMBER 2010			ST-240
TOWN ENGINEER				

T:\GIS\PPW\TLG GENERAL\Standard Details\ST-240.dwg

INTERIM EROSION CONTROL MEASURES

(USE AS APPLICABLE TO YOUR PROJECT.)

NOTES:

1. IT IS THE RESPONSIBILITY OF THE OWNER/CONTRACTOR TO INSURE THAT NO MUD OR SILTATION LEAVES THE PROJECT SITE.

2. INTERIM EROSION CONTROL MEASURES MUST BE COMPLETED AND IN PLACE BY OCTOBER 1.

3. ALL INTERIM EROSION CONTROL MEASURES MUST BE CONTINUOUSLY MAINTAINED THROUGHOUT THE OCTOBER 1 TO APRIL 15 RAINY SEASON.

4. CALL THE INSPECTION LINE AT (408) 399-5760 BY SEPTEMBER 15 FOR INSPECTION OF EROSION CONTROL DEVICES. CALL 24 HOURS IN ADVANCE. INCLUDE GRADING PERMIT NUMBER.

5. IF EROSION CONTROL MEASURES ARE NOT IN PLACE AS REQUIRED OR NOT MAINTAINED, ALL WORK SHALL CEASE UNTIL EROSION CONTROL MEASURES ARE REMEDIED.

MEASURES:

1. INSTALL SILT FENCE. PROVIDE DETAIL, SHOW LOCATION ON PLANS AND ADD NOTES AS NEEDED.

2. SEED EXPOSED AREAS PER TOWN SPECIFICATIONS. SEE BELOW.

3. INSTALL DRAINAGE MEASURES INCLUDING CATCH BASINS, ENERGY DISSIPATORS, ETC. PROVIDE DETAIL, SHOW LOCATIONS ON PLANS, AND ADD NOTES AS NEEDED.

4. INSTALL CHECK DAMS, SEDIMENT TRAPS AND BASINS, TEMPORARY SWALES.

5. INSTALL JUTE NETTING OVER SEEDED AND MULCHED SLOPES.

6. COVER BARE SLOPES WITH STRAW BLANKETS.

SEEDING SPECIFICATIONS:

1. SEED AND MULCH WILL BE APPLIED BY OCT 1 TO ALL DISTURBED SLOPES AND TO ALL CUTS AND FILL SLOPES WITHIN OR ADJACENT TO PUBLIC RIGHTS-OF-WAY AS DIRECTED BY TOWN ENGINEER.

2. SEED AND FERTILIZER WILL BE APPLIED HYDRAULICALLY OR BY HAND AT THE RATES SPECIFIED BELOW. ON SLOPES, STRAW WILL BE APPLIED BY BLOWER OR BY HAND AND ANCHORED IN PLACE BY PUNCHING OR WITH JUTE NETTING.

ITEM	POUNDS/ACRE
"Blando" brome	30
Annual rye grass	20
Fertilizer (16-20-0 & 15% sulfur)	500
Straw	4,000

3. SEEDED AREAS WILL BE REPAIRED, RESEEDED AND MULCHED, IF DAMAGED.

APPROVED BY	DATE		INTERIM EROSION CONTROL NOTES	STD. PLAN NO.
	NOVEMBER 2010			ST-255
TOWN ENGINEER				

T:\GIS\PPW\TLG GENERAL\Standard Details\ST-255.dwg

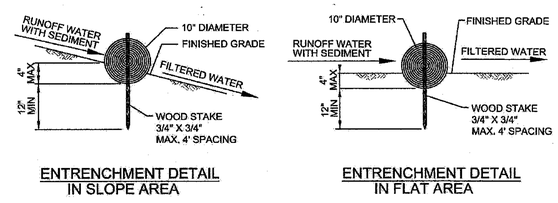

ENTRENCHMENT DETAIL IN SLOPE AREA

ENTRENCHMENT DETAIL IN FLAT AREA

NOTES:

1. STRAW ROLL INSTALLATION REQUIRES THE PLACEMENT AND SECURE STAKING OF THE ROLL IN A TRENCH, 3" TO 4" DEEP.

2. ADJACENT ROLLS SHALL TIGHTLY ABUT.

3. RUNOFF MUST NOT BE ALLOWED TO RUN UNDER OR AROUND STRAW ROLL.

4. STRAW ROLLS SHALL BE PLACED ON SLOPES @ MAX. 25' SPACING.

NOT TO SCALE

TOWN ENGINEER	APPROVED BY	STRAW ROLL	STD. PLAN NO.
	NOVEMBER 2010		ST-253
	DATE		

T:\GIS\PPW\TLG GENERAL\Standard Details\ST-253.dwg

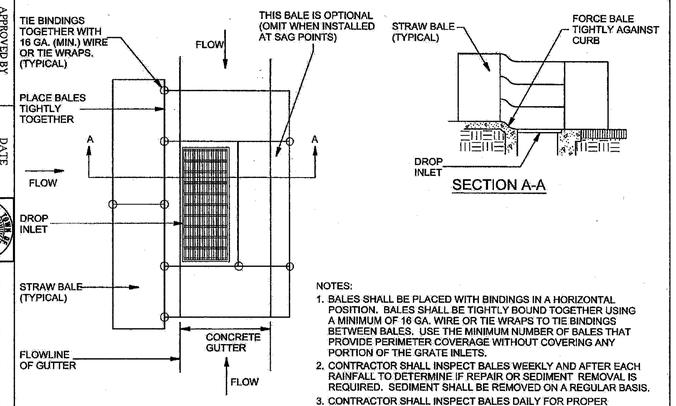

PLAN VIEW

SECTION A-A

NOTES:

1. BALES SHALL BE PLACED WITH BINDINGS IN A HORIZONTAL POSITION. BALES SHALL BE TIGHTLY BOUND TOGETHER USING A MINIMUM OF 16 GA. WIRE OR TIE WRAPS TO TIE BINDINGS BETWEEN BALES. USE THE MINIMUM NUMBER OF BALES THAT PROVIDE PERIMETER COVERAGE WITHOUT COVERING ANY PORTION OF THE GRATE INLETS.

2. CONTRACTOR SHALL INSPECT BALES WEEKLY AND AFTER EACH RAINFALL TO DETERMINE IF REPAIR OR SEDIMENT REMOVAL IS REQUIRED. SEDIMENT SHALL BE REMOVED ON A REGULAR BASIS.

3. CONTRACTOR SHALL INSPECT BALES DAILY FOR PROPER PLACEMENT AROUND THE DRAIN INLETS.

4. BALES SHALL BE REPLACED WHEN THEY HAVE BEEN DAMAGED, COLLAPSED OR DECOMPOSED.

NOT TO SCALE

TOWN ENGINEER	APPROVED BY	STRAW BALE INLET FILTER WITH GUTTER	STD. PLAN NO.
	NOVEMBER 2010		ST-252
	DATE		

T:\GIS\PPW\TLG GENERAL\Standard Details\ST-252.dwg

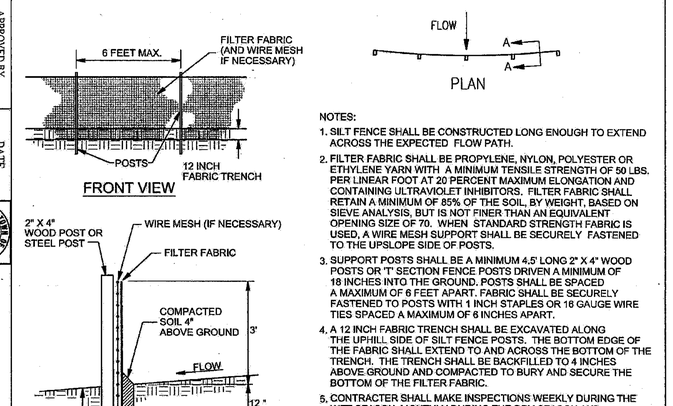

NOTES:

1. SILT FENCE SHALL BE CONSTRUCTED LONG ENOUGH TO EXTEND ACROSS THE EXPECTED FLOW PATH.

2. FILTER FABRIC SHALL BE PROPYLENE, NYLON, POLYESTER OR ETHYLENE YARN WITH A MINIMUM TENSILE STRENGTH OF 50 LBS. PER LINEAR FOOT AT 20 PERCENT MAXIMUM ELONGATION AND CONTAINING ULTRAVIOLET INHIBITORS. FILTER FABRIC SHALL RETAIN A MINIMUM OF 85% OF THE SOIL, BY WEIGHT, BASED ON SIEVE ANALYSIS, BUT IS NOT FINER THAN AN EQUIVALENT OPENING SIZE OF 70. WHEN STANDARD STRENGTH FABRIC IS USED, A WIRE MESH SUPPORT SHALL BE SECURELY FASTENED TO THE UPSLOPE SIDE OF POSTS.

3. SUPPORT POSTS SHALL BE A MINIMUM 4.5' LONG 2" X 4" WOOD POSTS OR "T" SECTION FENCE POSTS DRIVEN A MINIMUM OF 18 INCHES INTO THE GROUND. POSTS SHALL BE SPACED A MAXIMUM OF 6 FEET APART. FABRIC SHALL BE SECURELY FASTENED TO POSTS WITH 1 INCH STAPLES OR 16 GAUGE WIRE TIES SPACED A MAXIMUM OF 8 INCHES APART.

4. A 12 INCH FABRIC TRENCH SHALL BE EXCAVATED ALONG THE UPHILL SIDE OF SILT FENCE POSTS. THE BOTTOM EDGE OF THE FABRIC SHALL EXTEND TO AND ACROSS THE BOTTOM OF THE TRENCH. THE TRENCH SHALL BE BACKFILLED TO 4 INCHES ABOVE GROUND AND COMPACTED TO BURY AND SECURE THE BOTTOM OF THE FILTER FABRIC.

5. CONTRACTER SHALL MAKE INSPECTIONS WEEKLY DURING THE WET SEASON, MONTHLY DURING THE DRY SEASON AND IMMEDIATELY AFTER EACH RAINFALL TO DETERMINE IF REPAIRS AND SEDIMENT REMOVAL IS REQUIRED. SEDIMENT SHALL BE REMOVED BEFORE IT HAS REACHED ONE THIRD THE HEIGHT OF THE FILTER FABRIC.

NOT TO SCALE

TOWN ENGINEER	APPROVED BY	SILT FENCE	STD. PLAN NO.
	NOVEMBER 2010		ST-251
	DATE		

T:\GIS\PPW\TLG GENERAL\Standard Details\ST-251.dwg

Rev.	Date	Description	By

MISCELLANEOUS CIVIL DETAILS

ANWEST INC.
Civil + Structural Consulting Engineers
3095 Richmond Parkway, Suite 212
Richmond, CA 94806

Designed By:	Scale:
---	AS SHOWN
Drawn By: AJV	Project No: 5942-01
Checked By: ---	Date: 09/23/2016

Town of Los Gatos
Parks and Public Works Department
PAGEANT WAY PARKING LOT RECONSTRUCTION
Project No. 16-817-0707

Dwg No: C-6

ANW24x36-LosGatos

MODIFIED: 9/21/16 9:55

FILENAME: 5942-01\Drafting\Projdwgs\594201C06.dwg

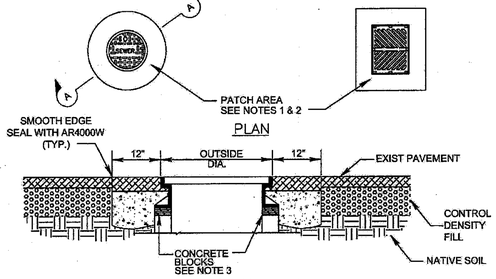

SECTION A-A

MANHOLE & CATCHBASIN ADJUSTMENT

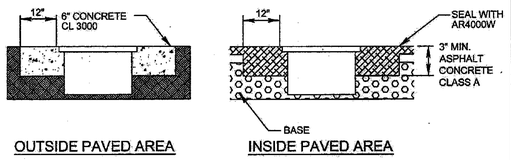

OUTSIDE PAVED AREA

INSIDE PAVED AREA

VALVE BOX ADJUSTMENT

NOT TO SCALE

NOTES:

1. REMOVE PAVEMENT AND BASE MATERIALS FOR A DISTANCE WHICH IS EQUAL TO THE DIAMETER OF THE FRAME PLUS TWO FEET. ADJUST CASTING FRAME TO NEW PAVEMENT SURFACE USING CONCRETE BLOCKS.
2. ASPHALT CONCRETE CLASS "B" (3" MIN.) REPLACEMENT PATCH TO BE 1" THICKER THAN PREVIOUSLY EXISTED. THE REST OF THE BACKFILL TO BE CONTROLLED DENSITY FILL.
3. 2"x4"x8" SOLID BRICK USED FOR FINAL ADJUSTMENT TO GRADE. 6" HIGH MAX.

APPROVED BY	DATE		MANHOLE/CATCH BASIN & VALVE BOX ADJUSTMENT	STD. PLAN NO.
	NOVEMBER 2010			SD-304
TOWN ENGINEER				

T:\GIS\PPW\TLG GENERAL\Standard Details\SD-304.dwg

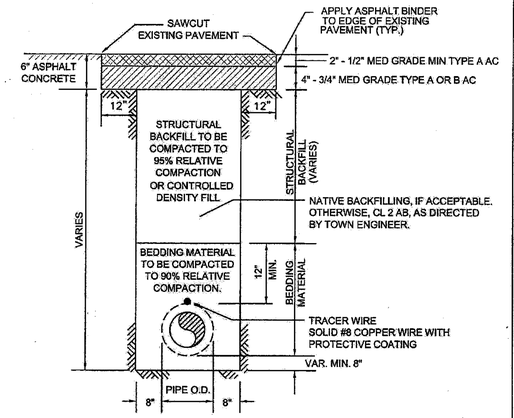

APPROVED BY	DATE		TRENCH DETAIL	STD. PLAN NO.
	NOVEMBER 2010			SD-305
TOWN ENGINEER				

T:\GIS\PPW\TLG GENERAL\Standard Details\SD-305.dwg

BEDDING MATERIAL

GRANULAR BEDDING MATERIAL REQUIREMENTS
CALTRANS DURABILITY INDEX MINIMUM 30

SIEVE SIZES	PERCENTAGE PASSING
1"	100
3/4"	90-100
3/8"	20-55
#4	0-10
#8	0-5

STRUCTURAL BACKFILL

STRUCTURAL BACKFILL REQUIREMENTS PERCENT PASSING MINIMUM SAND EQUIVALENT OF 20

SIEVE SIZES	PERCENTAGE PASSING
1-1/2"	100
3/4"	80-100
#4	30-60
#30	5-35
#200	0-12

NOTES:

1 ALL BACKFILL MATERIAL SHALL BE PLACED IN LIFTS NOT TO EXCEED 6 INCHES BEFORE COMPACTION UNLESS AUTHORIZED BY THE ENGINEER.

2 MECHANICAL COMPACTION OF BACKFILL MATERIAL SHALL NOT BEGIN UNTIL THE DEPTH OF COMPACTED BACKFILL MATERIAL IS 2 FEET ABOVE THE TOP OF PIPE.

3 EACH LIFT SHALL BE MECHANICALLY COMPACTED TO THE REQUIRED DENSITY PRIOR TO PLACING SUCCEEDING LIFTS OF BACKING MATERIAL.

4 COMPACTION TESTS SHALL BE AS REQUIRED BY THE TOWN CONSTRUCTION INSPECTOR, BUT IN NO CASE LESS THAN 2 TESTS EVERY 200 FT OF TRENCH. (ONE AT FINISH SUBGRADE AND ONE AT 50% OF TRENCH DEPTH).

5 IN-PLACE DENSITY WILL BE DETERMINED BY ONE OR MORE OF THE FOLLOWING METHODS.
(A) ASTM D1557, TEST FOR DENSITY OF SOIL IN-PLACE BY THE SAND CONE METHOD.
(B) ASTM D2922 - (NUCLEAR METHOD)

6 LABORATORY DENSITY WILL BE DETERMINED BY ASTM D1557, MOISTURE-DENSITY RELATIONS OF SOILS AND SOIL-AGGREGATE MIXTURES.

7 IF THE EDGE OF THE TRENCH FALLS WITHIN 3' OF THE GUTTER, THE ENTIRE PAVEMENT SHALL BE REMOVED TO THE GUTTER.

8 ON STEEP SLOPES, CONSTRUCT CLAY OR CONCRETE DAM THROUGH THE BEDDING MATERIAL AS DETERMINED BY TOWN ENGINEER.

9 FOR CONCRETE STREETS PLACE 6" CLASS A P.C.C. OVER 6" CLASS 2 A.B. FOR FINISHED SURFACE.

10 ALL TRENCH CONSTRUCTION SHALL BE IN COMPLIANCE WITH LATEST OSHA STANDARDS.

11 PLACE PERMANENT PAVEMENT WITHIN 30 DAYS AFTER BACKFILLING. INSTALL TEMPORARY AC TO FINISH GRADE UNTIL PERMANENT AC IS PLACED.

12 IF EXISTING AC SECTION IS LESS THAN 4", GRIND AC KEY TO FULL DEPTH OF EXISTING AC & REPLACE FULL DEPTH OF AC SECTION (3" MIN.)

13 IN PAVED STREETS, ALL CUTS SHALL BE SMOOTH & VERTICAL WITH THE AREA BEING GENERALLY RECTANGULAR. NATIVE MATERIAL MAY BE USED AS BACKFILL IF APPROVED BY TOWN ENGINEER. IF SAND BACKFILL IS USED, IT MUST BE WELL GRADED, TAMPED WITH VIBRATORY COMPACTOR & LIGHTLY JETTED, IF NECESSARY.

14 A SEMI-FINISHED SURFACE OF CUTBACK OR LOWERED CROSS-SECTION (MAX. LOWERED DEPTH, 1/2") OF ASPHALTIC CONCRETE WILL BE ALLOWED FOR A MAXIMUM OF 30 DAYS AFTER BACKFILLING TO ALLOW FOR SETTLING. CONTRACTOR SHALL PATCH ANY TIME THAT EXCESSIVE SETTLING OCCURS.

15 WITHIN 30 DAYS, CONTRACTOR SHALL RESTORE SURFACE TO ITS ORIGINAL CONDITION & BE RESPONSIBLE FOR ANY FURTHER SETTLING OR FAILURE FOR A MIN. OF 2 YEARS. IF CUTBACK IS USED AS A SEMI-FINISHED SURFACE, IT SHALL BE REMOVED BEFORE FINISHING. A 6" EDGE OF EXISTING AC SHALL BE REMOVED AROUND THE PERIMETER OF THE CUT BEFORE PLACEMENT OF ASPHALTIC CONCRETE.

16 A 6" COURSE OF CRUSHED ROCK BASE (1.5" MAX. AGGREGATE) & 3" ASPHALTIC CONRETE IS MIN. SURFACING TO BE RESTORED. NO RESTORATION SHALL BE LESS SUBSTANTIAL THAN EXISTING COMPOSITION. IN CASES OF CONCRETE STREETS, A 6" THICKNESS OF CONCRETE ON A 6" ROCK CUSHION IS THE MINIMUM STANDARD.

APPROVED BY	DATE		TRENCH DETAIL NOTES	STD. PLAN NO.
	NOVEMBER 2010			SD-306
TOWN ENGINEER				

T:\GIS\PPW\TLG GENERAL\Standard Details\SD-306.dwg

Rev.	Date	Description	By

MISCELLANEOUS CIVIL DETAILS

ANWEST INC.
Civil + Structural Consulting Engineers
3095 Richmond Parkway, Suite 212
Richmond, CA 94806

Designed By:	Scale:
---	AS SHOWN
Drawn By: AJV	Project No: 5942-01
Checked By: ---	Date: 09/23/2016

Town of Los Gatos
Parks and Public Works Department
PAGEANT WAY PARKING LOT RECONSTRUCTION
Project No. 16-817-0707

Dwg No: C-7

ANW24x36-LosGatos
MODIFIED: 9/21/16 9:55
FILENAME: 5942-01\Drafting\Projdwgs\594201C07.dwg